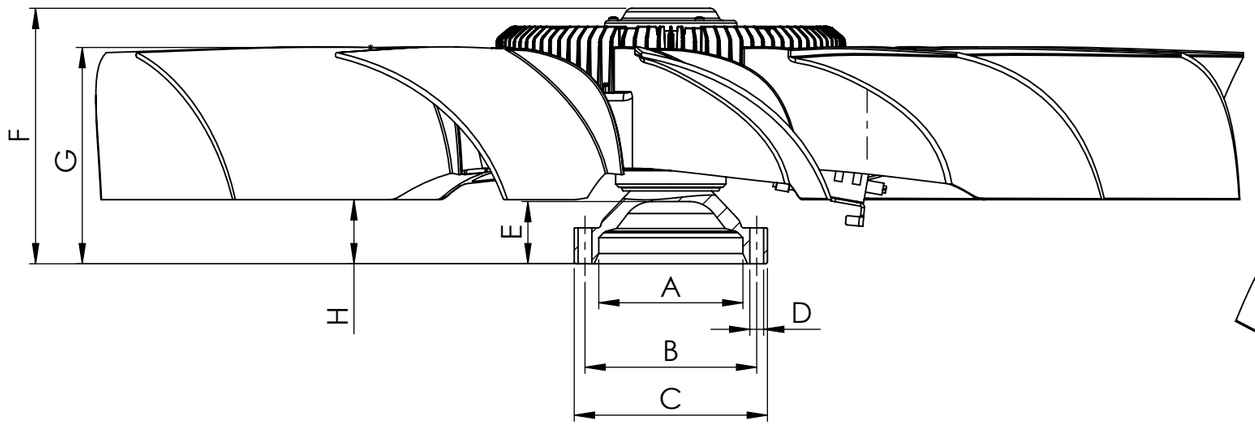

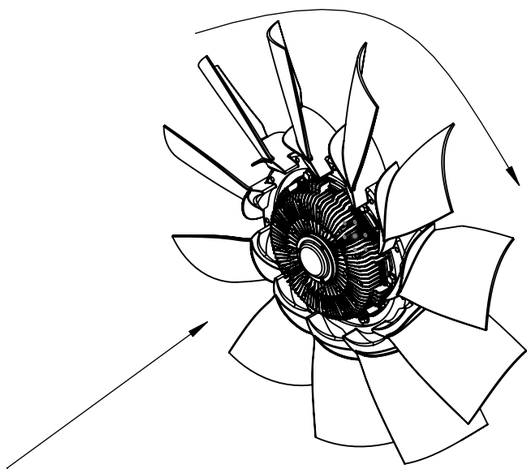

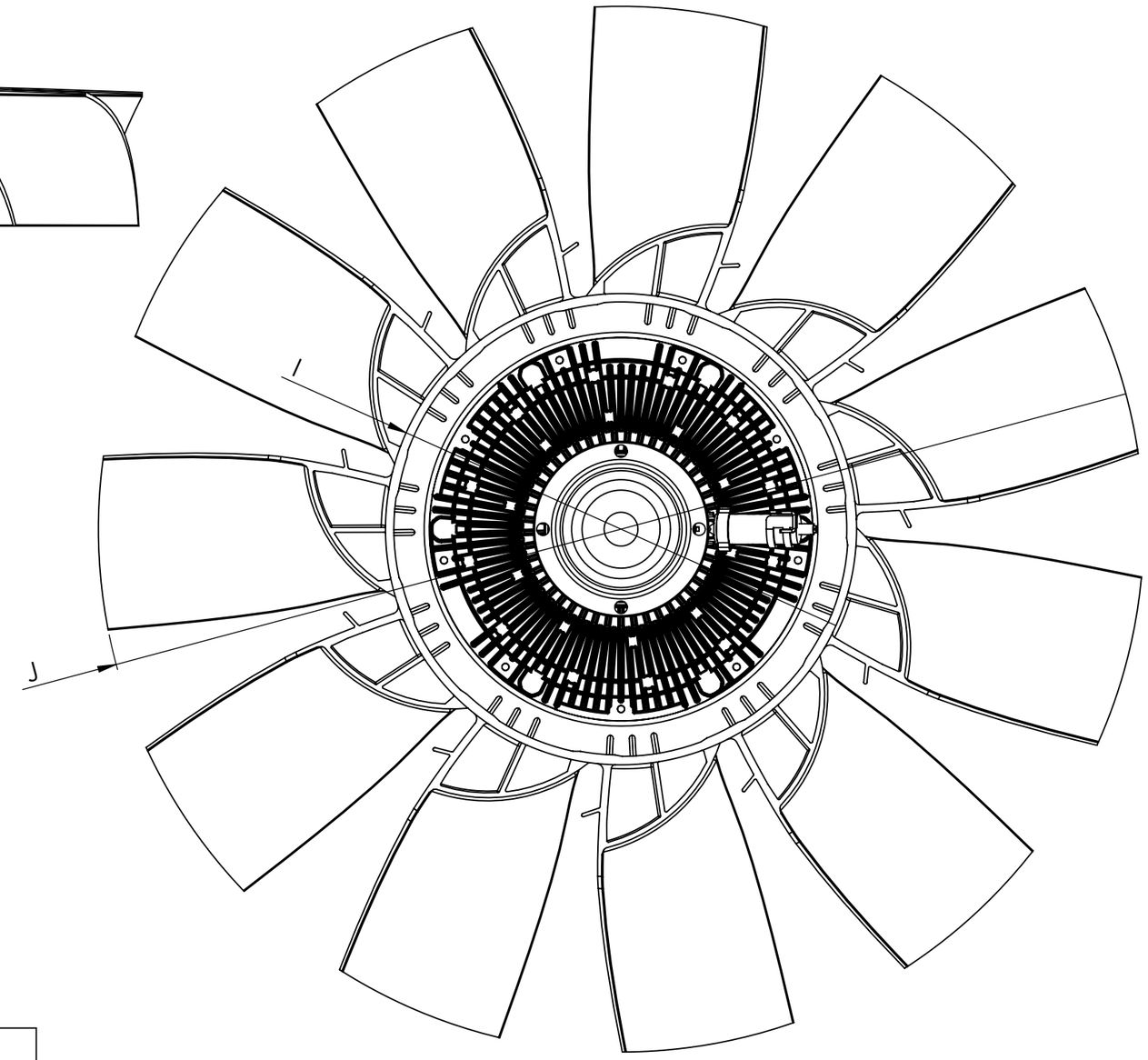

Dimensional values

INPUT SHAFT				FAN CLUTCH WHEEL			
Ref.nº	Value	Ref.nº	Value	Ref.nº	Value	Ref.nº	Value
A	∅94 H8 mm			F	166.6±1 mm		
B	∅112 mm			G	137.8±3 mm		
C	∅126 mm			H	37.3±3 mm		
D	4x ∅9 mm			I	∅340±3 mm		
E	40.6±2 mm			J	∅750±3 mm		
				Number of blades	11	Configuration	CW

Modification					
4				Drawn	
3				12/09/24 J.J.	
2				Checked	
1				12/09/24 R.U	
nº	Modified	Date	Reason	General Tolerance	
Comments				ISO 2768 c-K	
				Material	

cojali

Assembly	Technical sheet
Part name	T28
ID. Reference	7205411
Scale: 1/4	Sheet 1/1
Review: 0	