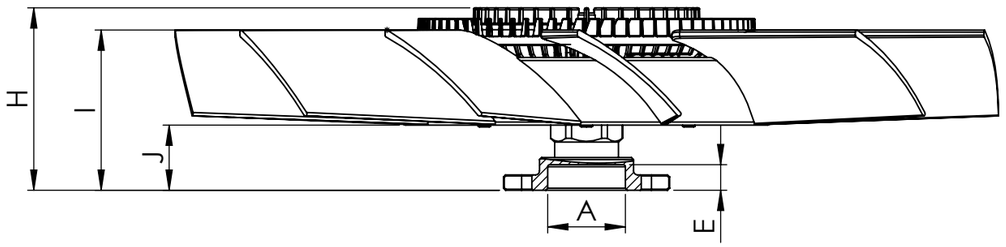

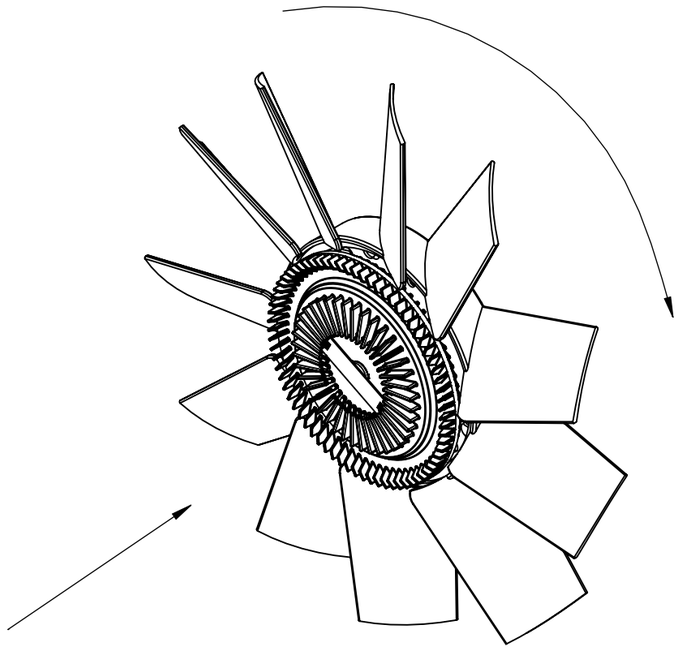

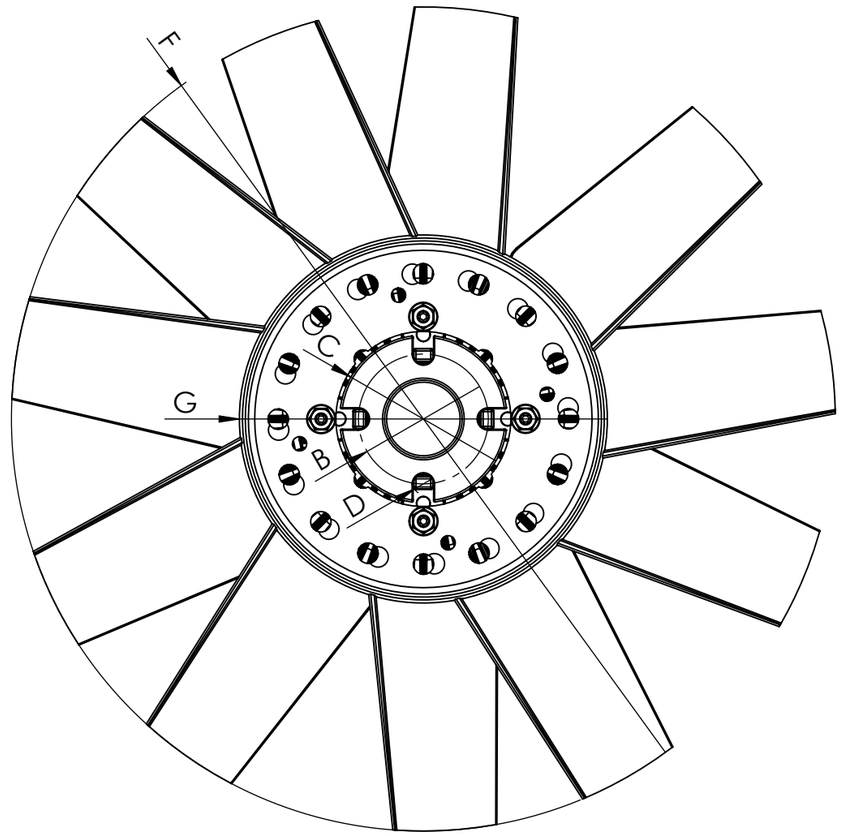

Dimensional values

INPUT SHAFT				FAN CLUTCH WHEEL			
Ref.nº	**Value**	**Ref.nº**	**Value**	**Ref.nº**	**Value**	**Ref.nº**	**Value**
A	∅38 H8 mm			F	∅403 ± 3 mm		
B	∅63.5 mm			G	∅180 ± 3 mm		
C	∅82 mm			H	71 ± 1 mm		
D	4x ∅10 mm			I	64 ± 3 mm		
E	13 ± 2 mm			J	18± 3 mm		
				Number of blades	11	**Configuration**	CW

Modification				
nº	**Modified**	**Date**	**Reason**	
4				
3				
2				
1				

Comments

Drawn	01/12/20 A.G.
Checked	01/12/20 R.U.
General Tolerance	ISO 2768 c-K
Material	

cojali

Assembly	Technical sheet
Part name	Fan clutch wheel
ID. Reference	8521875
Scale: 1/3	
Review: 0	
Sheet	**1/1**