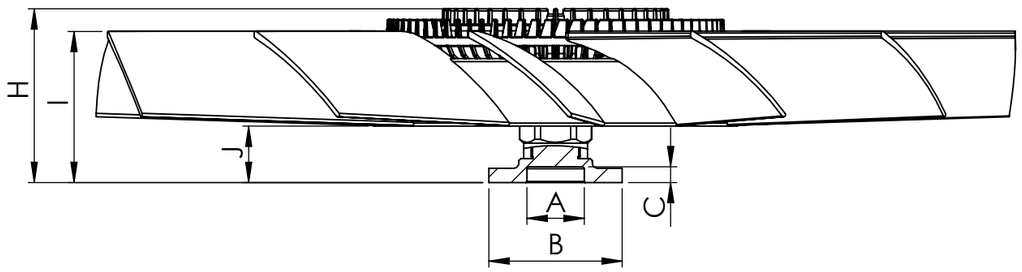

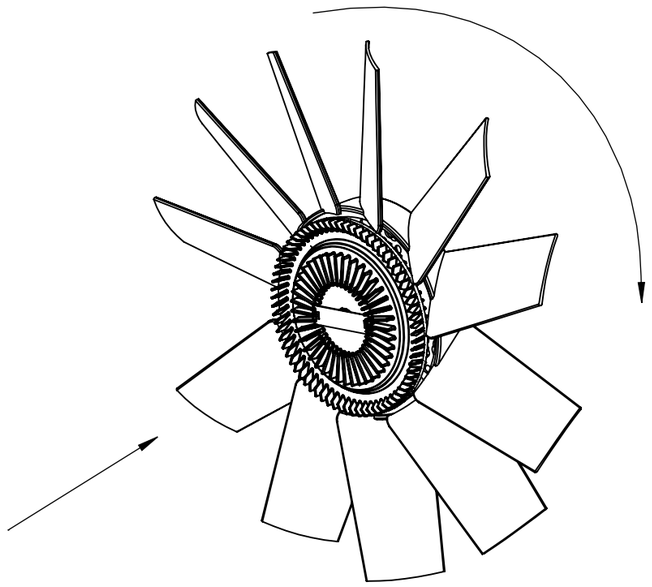

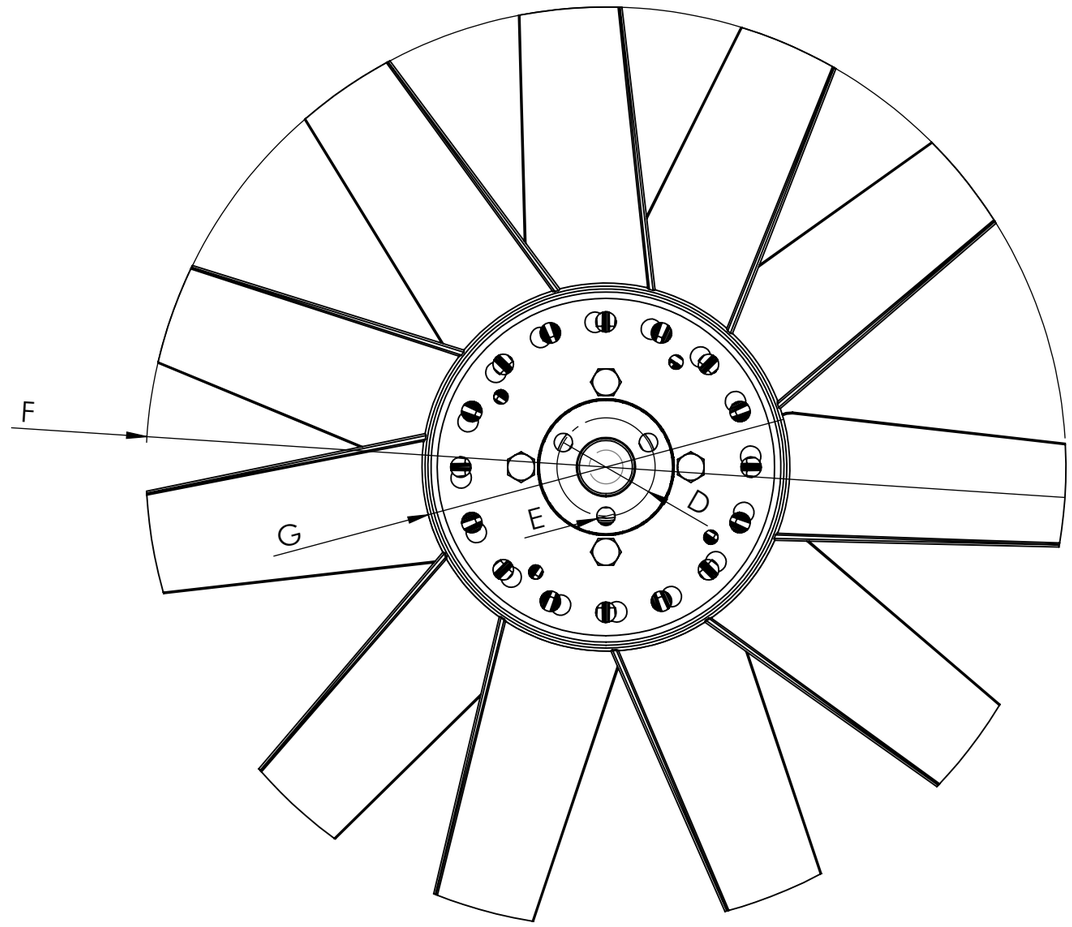

Dimensional values

INPUT SHAFT				FAN CLUTCH WHEEL			
Ref.nº	**Value**	**Ref.nº**	**Value**	**Ref.nº**	**Value**	**Ref.nº**	**Value**
A	∅28 H8 mm			F	∅450 ±3 mm		
B	∅65.2 0 -0.3 mm			G	∅180 ±3 mm		
C	7.7 ±2 mm			H	75.9 ± 1 mm		
D	∅48 mm			I	65.4 ±3 mm		
E	3x ∅9 mm			J	19.9 ±3 mm		
				Number of blades	11	**Configuration**	CW

Modification

nº	Modified	Date	Reason
4			
3			
2			
1			

Comments

Drawn	13/02/24 L.M.G
Checked	13/02/24 R.U
General Tolerance	ISO 2768 c-K
Material	
Assembly	Technical sheet
Part name	EVVL
ID. Reference	8521893
Scale: 1/3	
Review: 0	
Sheet	**1/1**