Technical sheet/Datos Técnicos:

Part number adaptable to/Referencia adaptable a:	81.27421-0232
Operating temperature range/Rango de temperatura:	-40ºC a/to +120ºC
Weight / Peso:	24 g

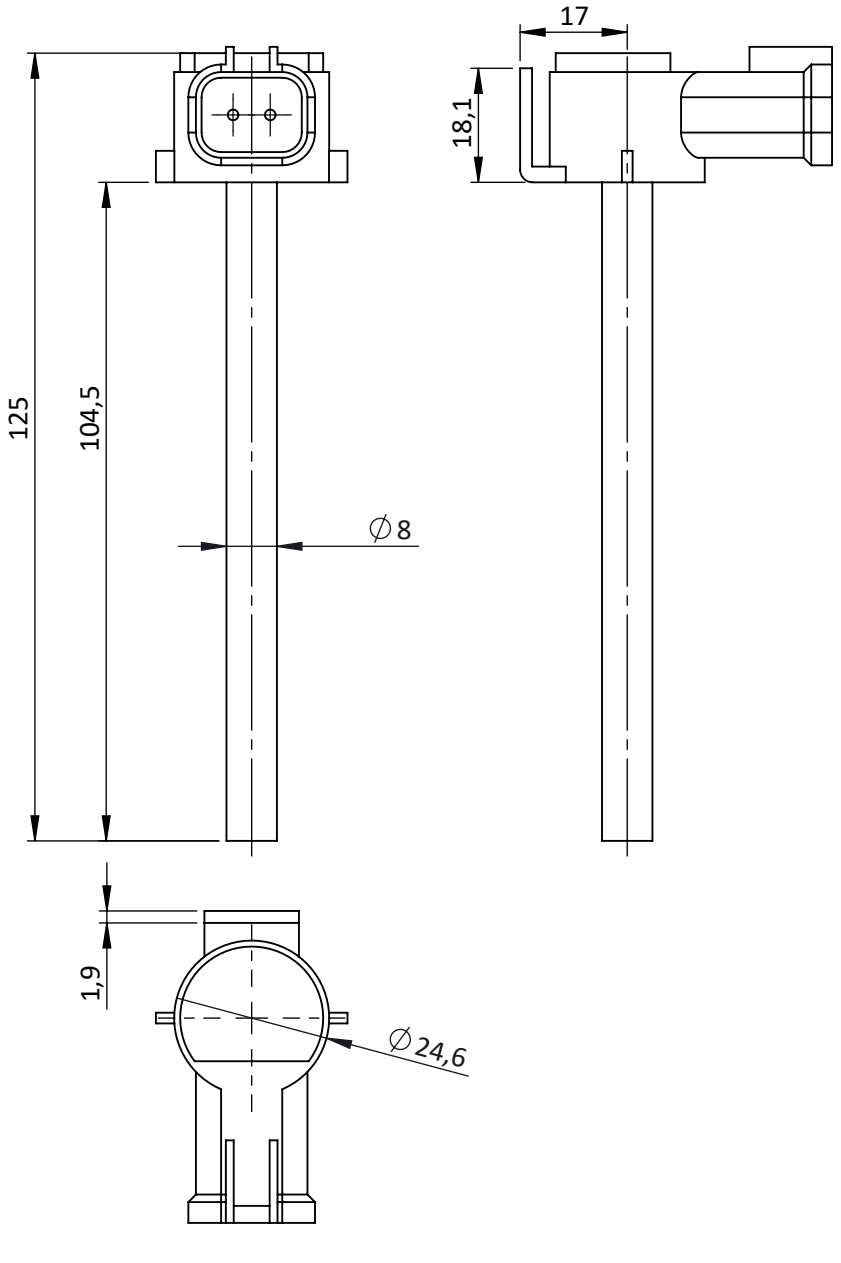

Modification						
4					Drawn	cojali
3					04/09/19 R.A.	
2					Checked	
1					04/09/19 O.V.	
nº	Modified	Date	Reason	General Tolerance	Assembly	-
Comments				ISO 2768 c-K	Part name	COOLANT LEVEL SENSOR/ SENSOR NIVEL DE REFRIGERANTE
				Material	ID. Reference	2260322
				-	Scale: -	Sheet 1/1
					Review: 0	