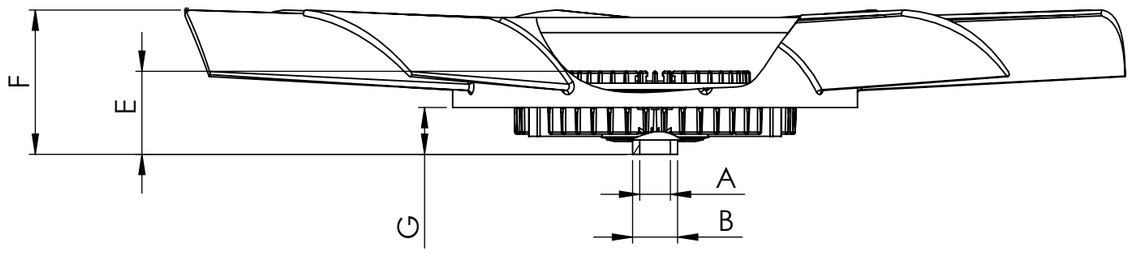

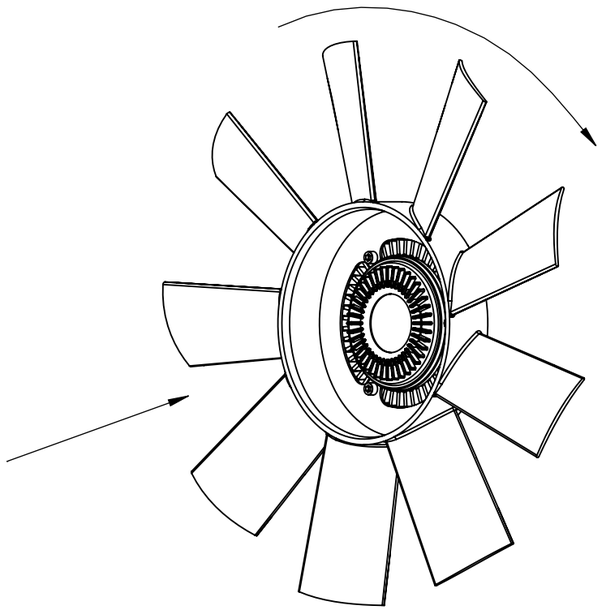

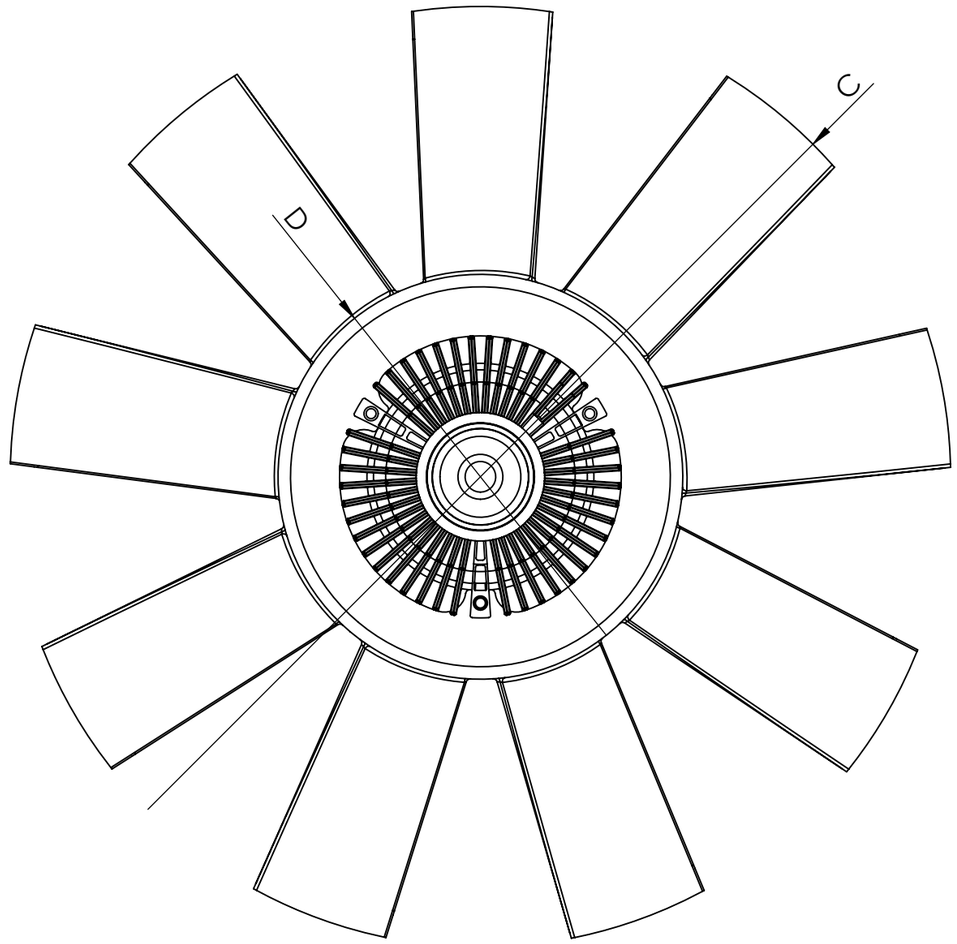

Dimensional values

INPUT SHAFT				FAN CLUTCH WHEEL			
Ref.nº	**Value**	**Ref.nº**	**Value**	**Ref.nº**	**Value**	**Ref.nº**	**Value**
A	∅10,6 +0,2 0 mm			C	∅460 ±3 mm		
B	∅15 mm			D	∅198 ±3 mm		
				E	42,4 ± 1 mm		
				F	68,6 ±3 mm		
				G	20,6 ±3 mm		
				Number of blades	9	**Configuration**	CW

Modification				
4				
3				
2				
1				
nº	**Modified**	**Date**	**Reason**	

Comments

The drawing views may not match the actual part.

Drawn	02/07/20 S.F.
Checked	02/07/20 A.D.
General Tolerance	ISO 2768 c-K
Material	

cojali

Assembly	Technical sheet
Part name	Fan clutch wheel
ID. Reference	8124142
Scale: 1/3	
Review: 0	
Sheet 1/1	