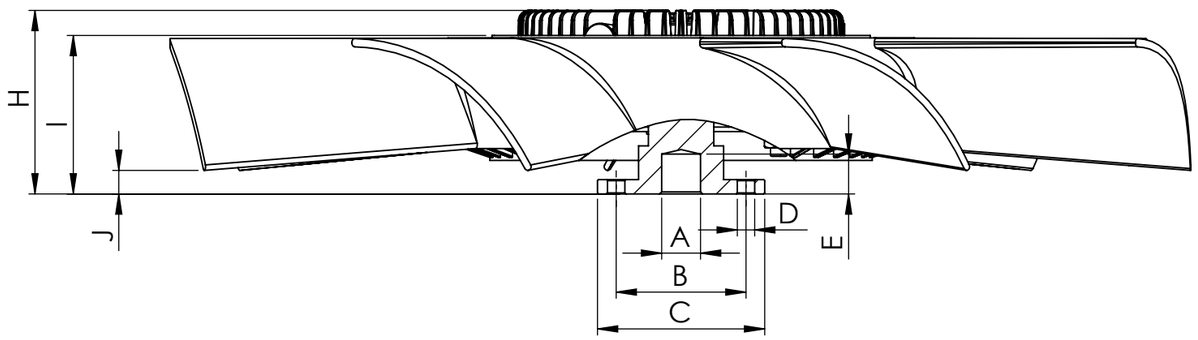

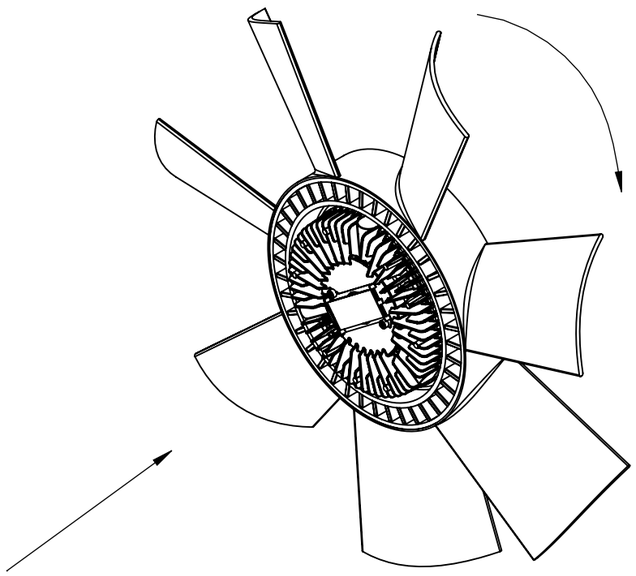

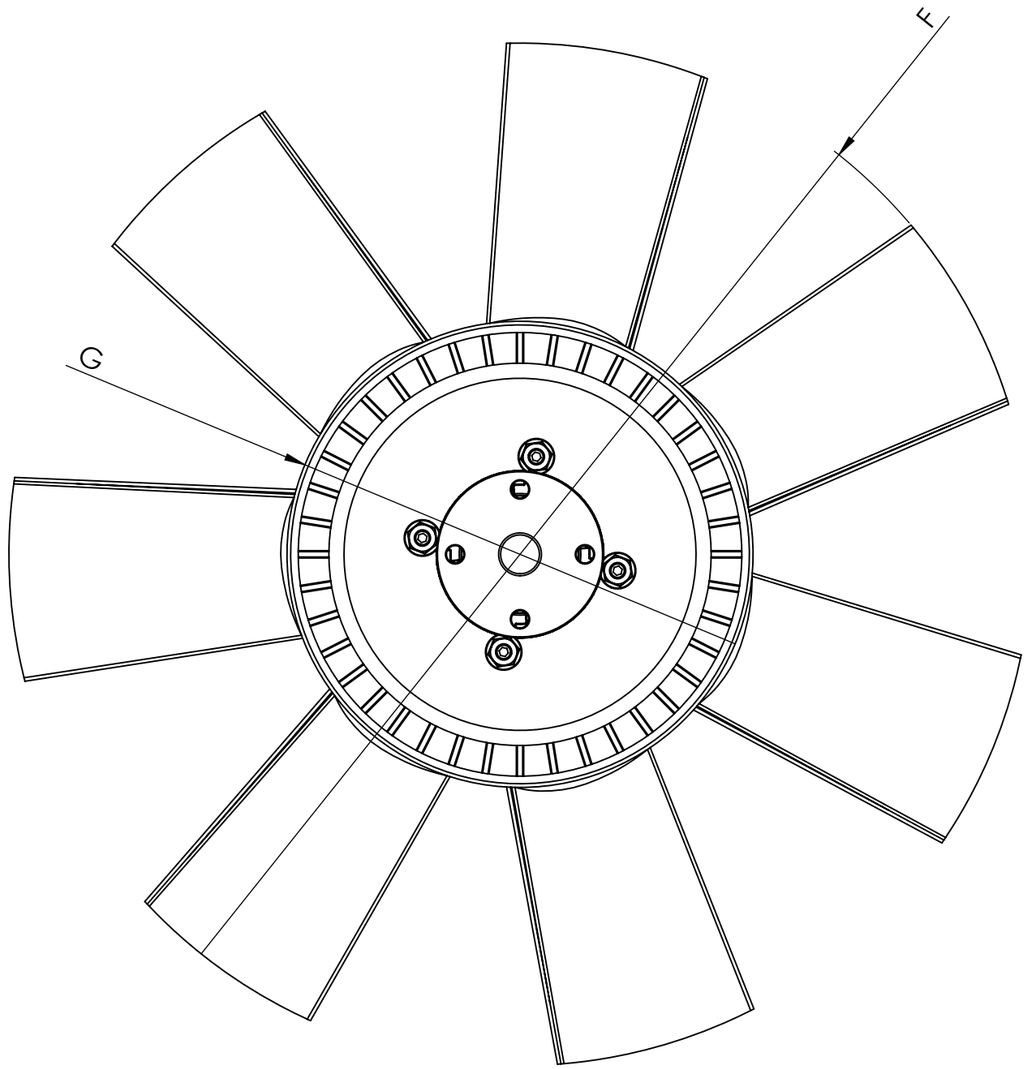

Dimensional values

INPUT SHAFT				FAN CLUTCH WHEEL			
Ref.nº	**Value**	**Ref.nº**	**Value**	**Ref.nº**	**Value**	**Ref.nº**	**Value**
A	∅19 H8 mm			F	∅500 ±3 mm		
B	∅63.5 mm			G	∅230 ±3 mm		
C	∅81.8 mm			H	89.8 ± 1 mm		
D	4x ∅8.5 mm			I	75 ±3 mm		
E	21.7 ±2 mm			J	11 ±3 mm		
				Number of blades	7	**Configuration**	CW

Modification				
4				
3				
2				
1				
nº	**Modified**	**Date**	**Reason**	

Comments

Drawn	30/07/20 R.U.
Checked	30/07/20 A.R.
General Tolerance	ISO 2768 c-K
Material	

cojali

Assembly	Technical sheet
Part name	Fan clutch wheel
ID. Reference	8521157
Scale: 1/3	**Sheet 1/1**
Review: 0	