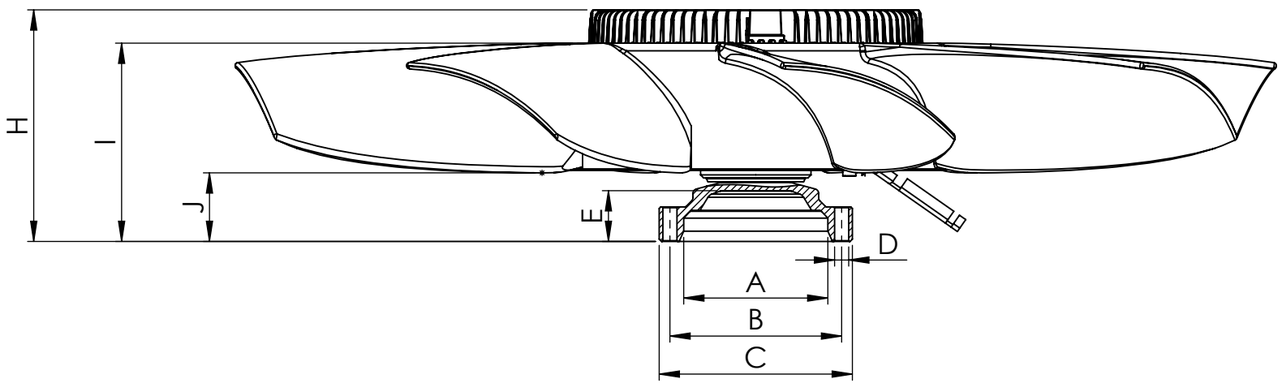

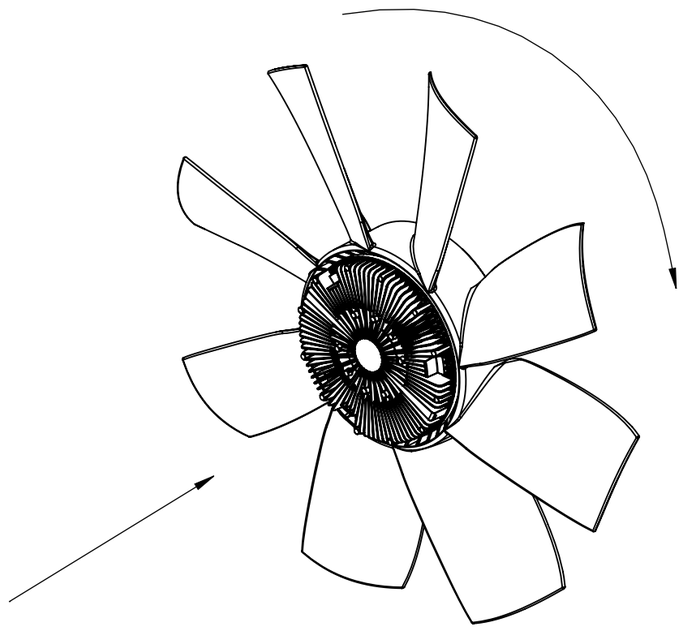

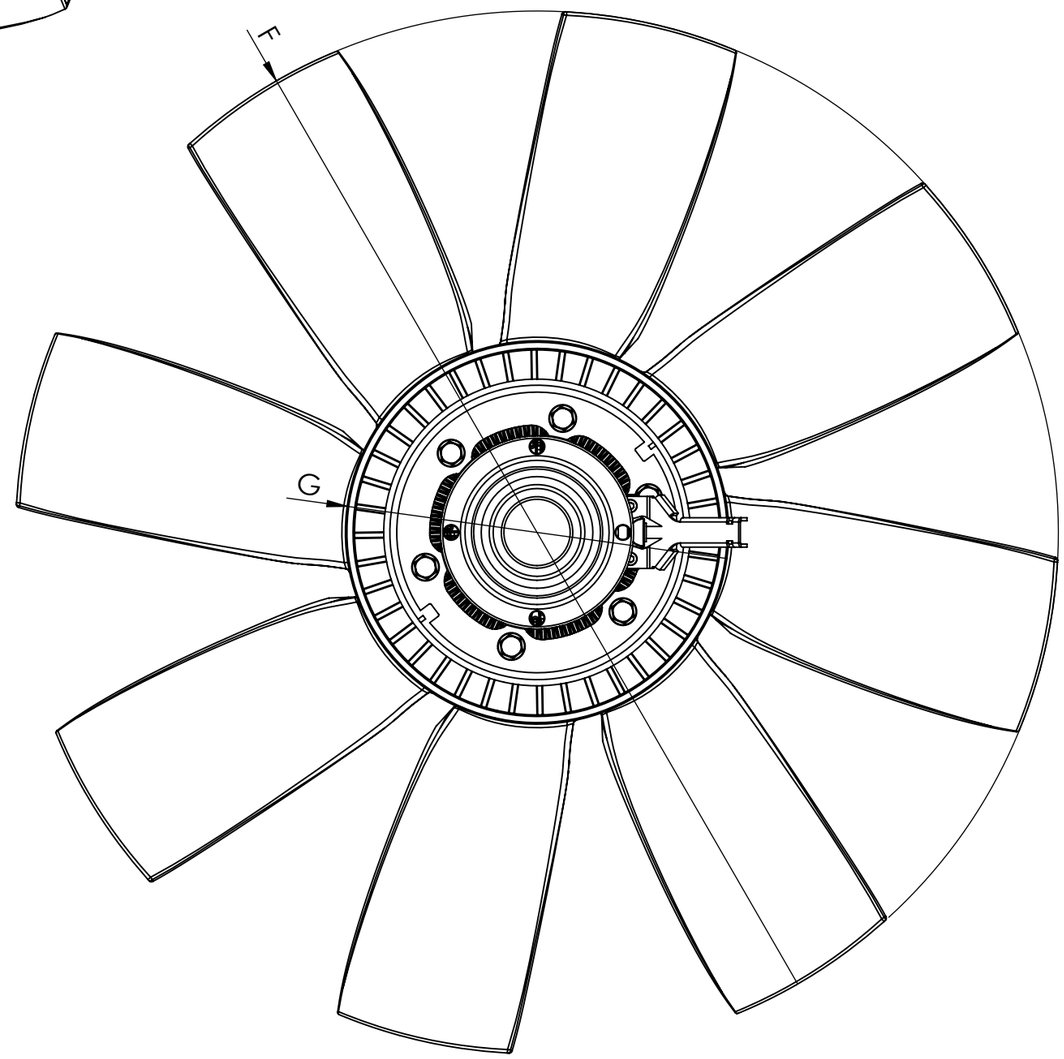

Dimensional values

INPUT SHAFT				FAN CLUTCH WHEEL			
Ref.nº	**Value**	**Ref.nº**	**Value**	**Ref.nº**	**Value**	**Ref.nº**	**Value**
A	∅94 H8 mm			F	∅680 ±3 mm		
B	∅112 mm			G	∅248 ±3 mm		
C	∅126 mm			H	150.8 ±1 mm		
D	4x ∅9.2 mm			I	127.7 ±3 mm		
E	33.1 ±2 mm			J	42.4 ±3 mm		
				Number of blades	8	**Configuration**	CW

Modification

nº	Modified	Date	Reason
4			
3			
2	A.G.	23/11/20	Modify the bottom of the shaft.
1	A.G.	01/10/20	Modify the bottom of the shaft.

Comments

Drawn	01/06/20 A.G.
Checked	01/06/20 R.U.
General Tolerance	ISO 2768 c-K
Material	

cojali

Assembly	Technical sheet
Part name	Fan clutch wheel
ID. Reference	7085410
Scale: 1/4	
Review: 2	
Sheet	**1/1**