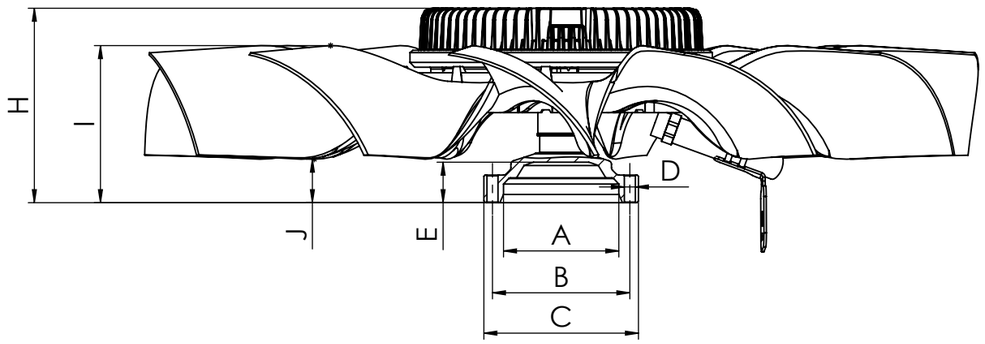

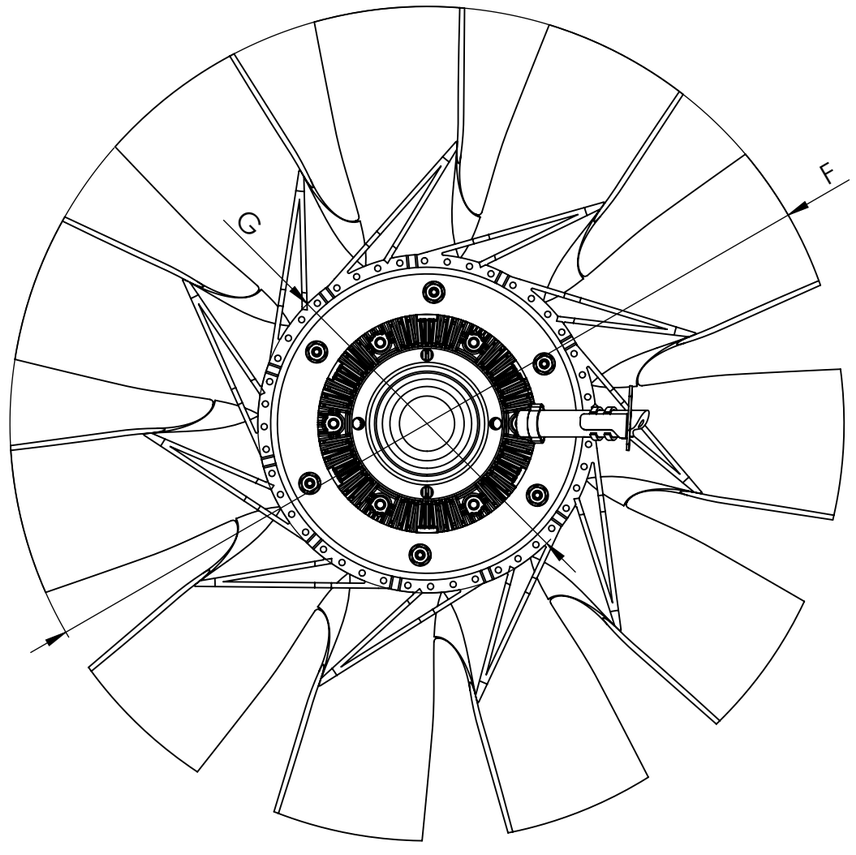

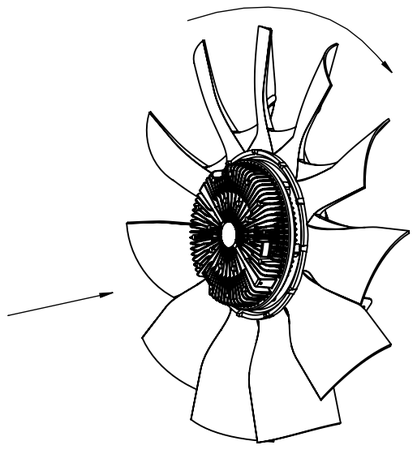

Dimensional values

INPUT SHAFT				FAN CLUTCH WHEEL			
Ref.nº	**Value**	**Ref.nº**	**Value**	**Ref.nº**	**Value**	**Ref.nº**	**Value**
A	∅94 H8 mm			F	∅680 ±3 mm		
B	∅112 mm			G	∅276.4 ±3 mm		
C	∅126 mm			H	158.5 ±1 mm		
D	4x ∅9 mm			I	126.3 ±3 mm		
E	33 ±2 mm			J	33 ±3 mm		
				Number of blades	11	**Configuration**	CW

Modification

nº	Modified	Date	Reason
4			
3			
2	S.F.	04/05/20	Change sheet format and review dimensions
1	S.F.	02/03/20	Change sheet format

Comments

Drawn	09/04/18 J.S.
Checked	09/04/18 A.C.
General Tolerance	ISO 2768 c-K
Material	

cojali

Assembly	Technical sheet
Part name	Fan clutch wheel
ID. Reference	7085415
Scale: 1/5	
Review: 2	
Sheet	**1/1**