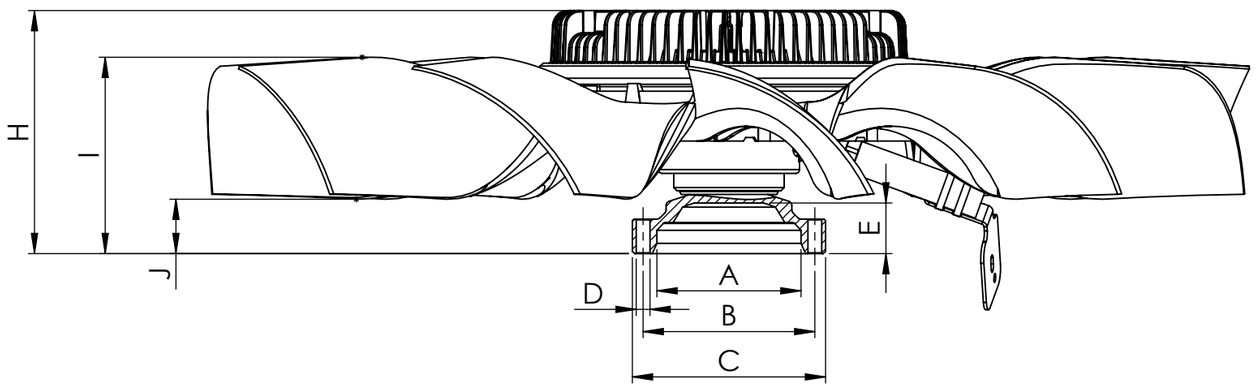

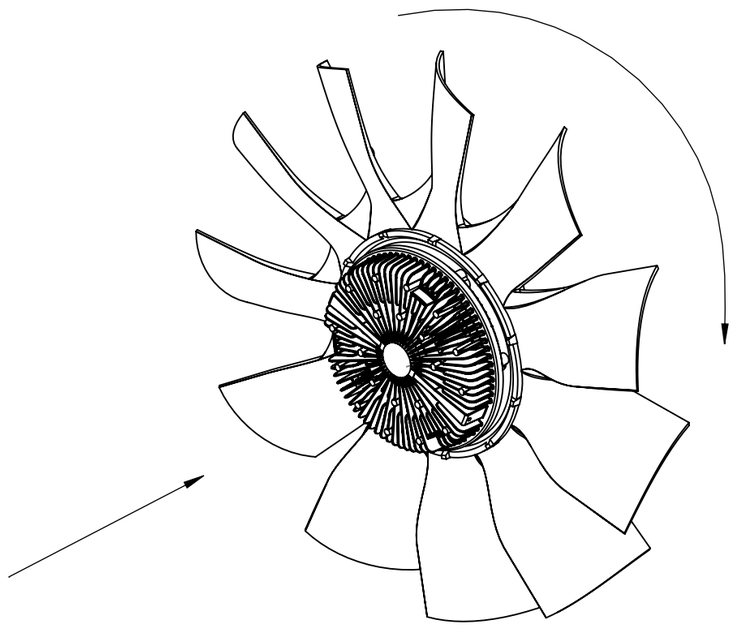

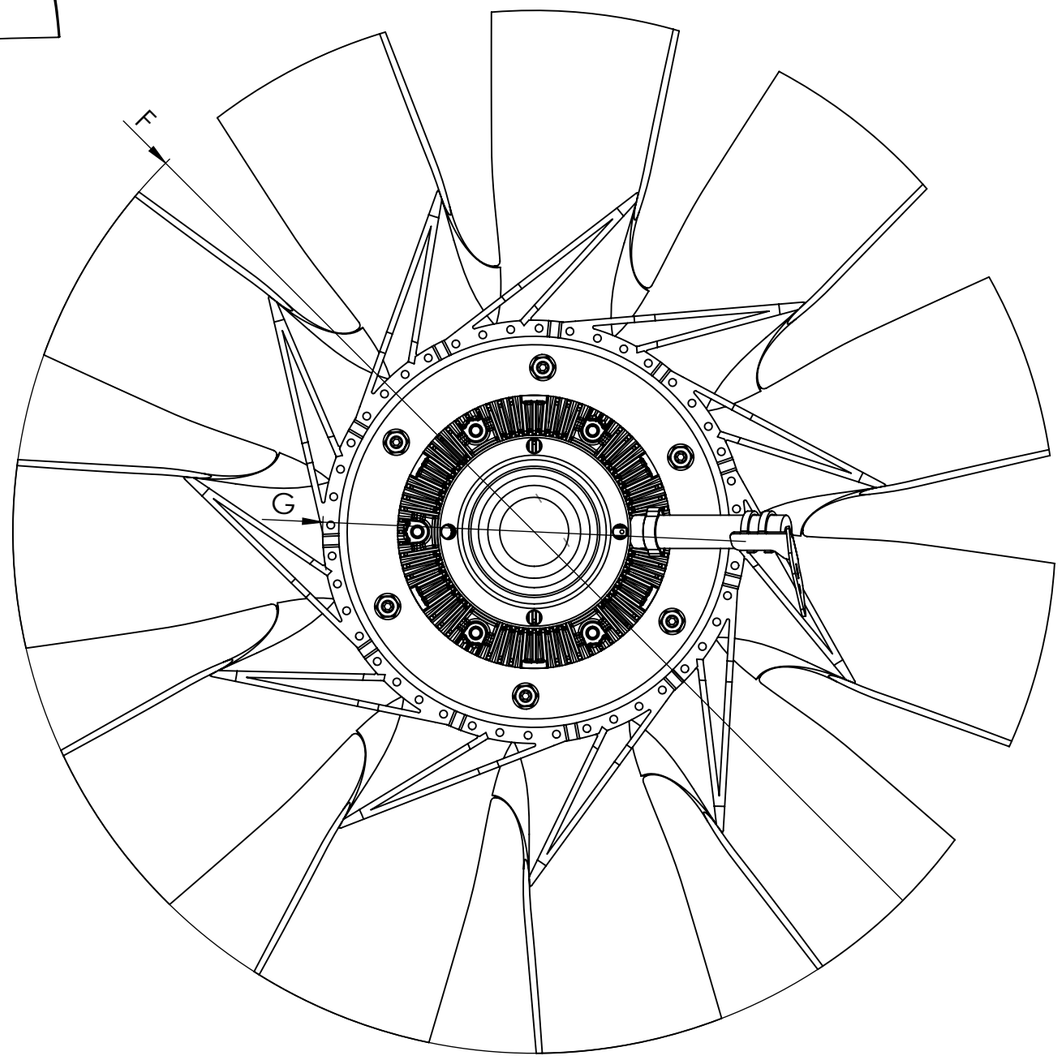

Dimensional values

INPUT SHAFT				FAN CLUTCH WHEEL			
Ref.nº	**Value**	**Ref.nº**	**Value**	**Ref.nº**	**Value**	**Ref.nº**	**Value**
A	∅94 H8 mm			F	∅680 ±3 mm		
B	∅112 mm			G	∅277 ±3 mm		
C	∅126 mm			H	158.5 ±1 mm		
D	4x ∅9 mm			I	127.9 ±3 mm		
E	33 ±2 mm			J	35.6 ±3 mm		
				Number of blades	11	**Configuration**	CW

Modification nº	Modified	Date	Reason
4			
3			
2			
1			

Comments

Drawn	01/06/20 A.G.
Checked	01/06/20 R.U.
General Tolerance	ISO 2768 c-K
Material	

cojali

Assembly	Technical sheet
Part name	Fan clutch wheel
ID. Reference	7085418
Scale: 1/4	
Review: 0	
Sheet 1/1	