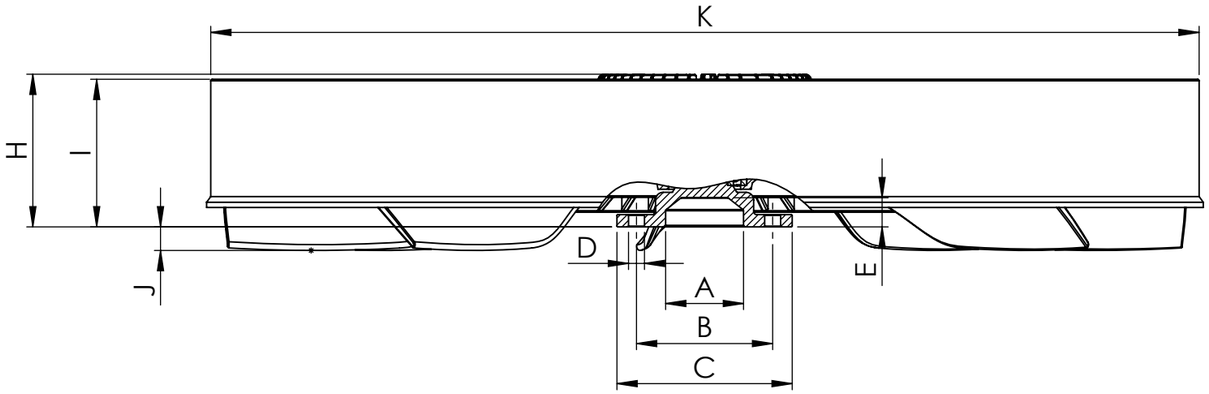

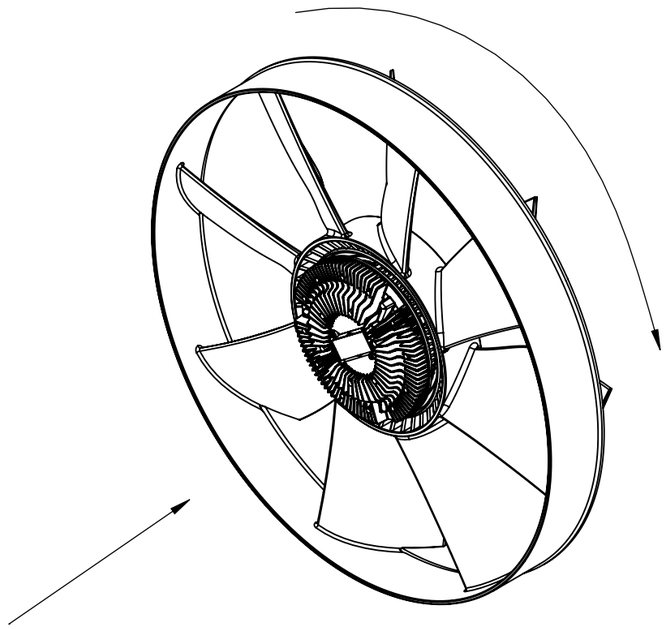

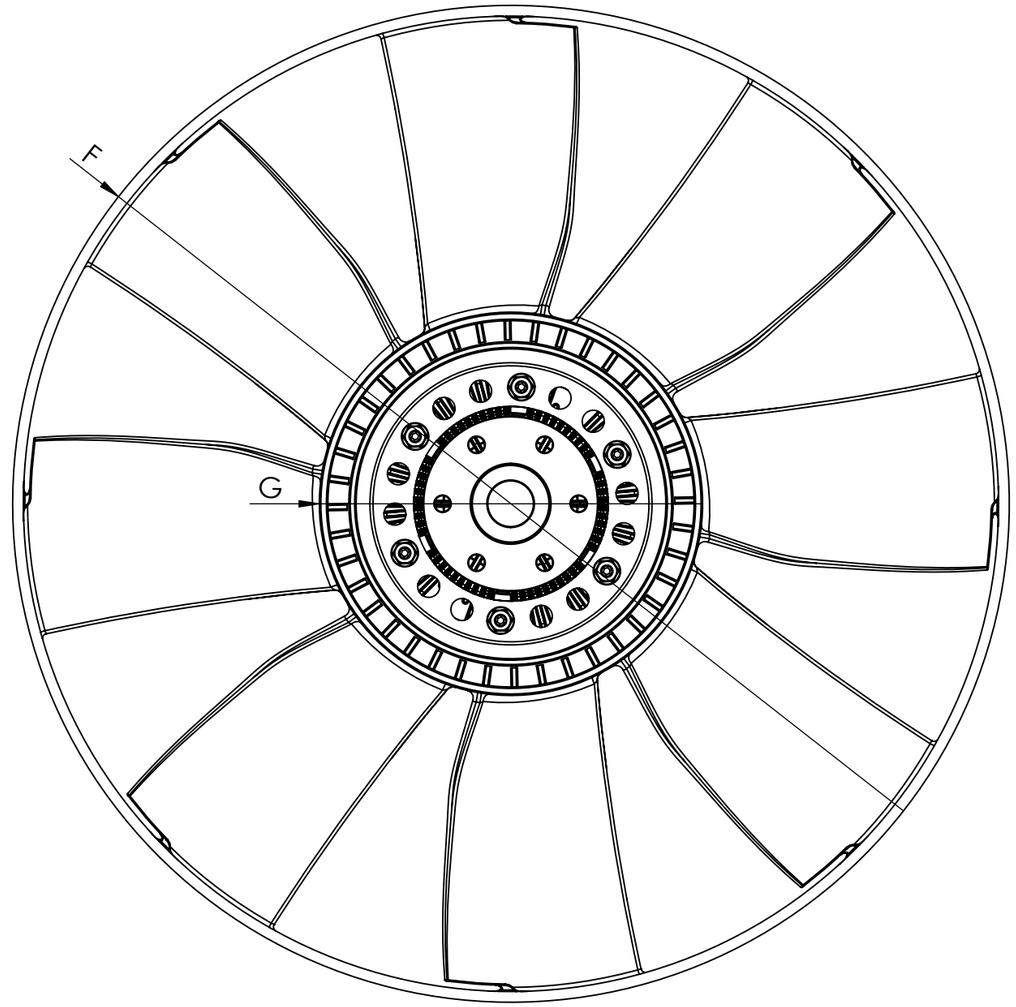

Dimensional values

INPUT SHAFT				FAN CLUTCH WHEEL			
Ref.nº	**Value**	**Ref.nº**	**Value**	**Ref.nº**	**Value**	**Ref.nº**	**Value**
A	∅50.8 H8 mm			F	∅650 ±3 mm		
B	∅88.8 mm			G	∅250 ±3 mm		
C	∅114.3 mm			H	99.6 ± 1 mm		
D	6x ∅10.4 mm			I	96.1 ±3 mm		
E	19 ±2 mm			J	13.9 ±3 mm		
				K	∅645 ±3 mm		
				Number of blades	8	**Configuration**	CW

Modification				
4				
3				
2				
1				
nº	**Modified**	**Date**	**Reason**	

Comments

Drawn	
13/07/20 A.G.	
Checked	
13/07/20 R.U.	
General Tolerance	
ISO 2768 c-K	
Material	

cojali

Assembly	Technical sheet
Part name	Fan clutch wheel
ID. Reference	7245104
Scale: 1/4	
Review: 0	
Sheet 1/1	