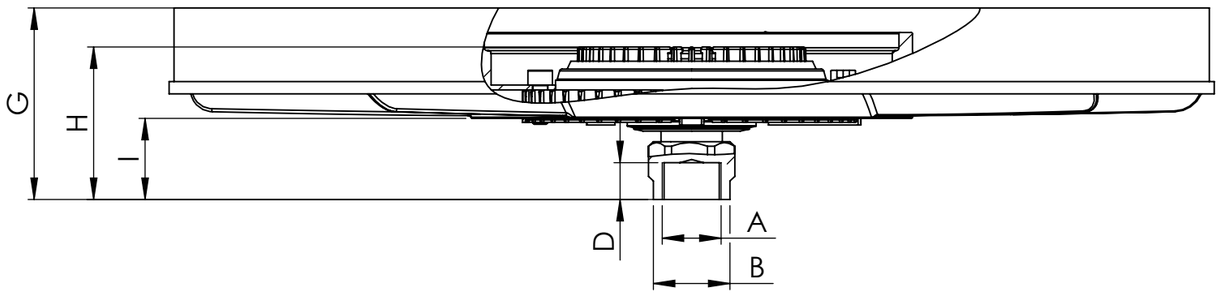

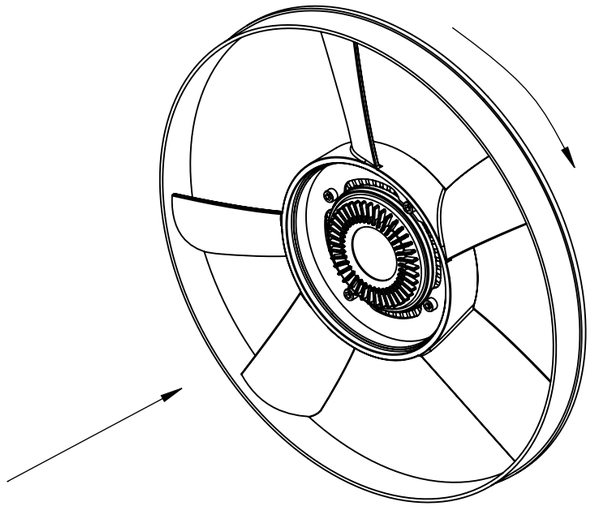

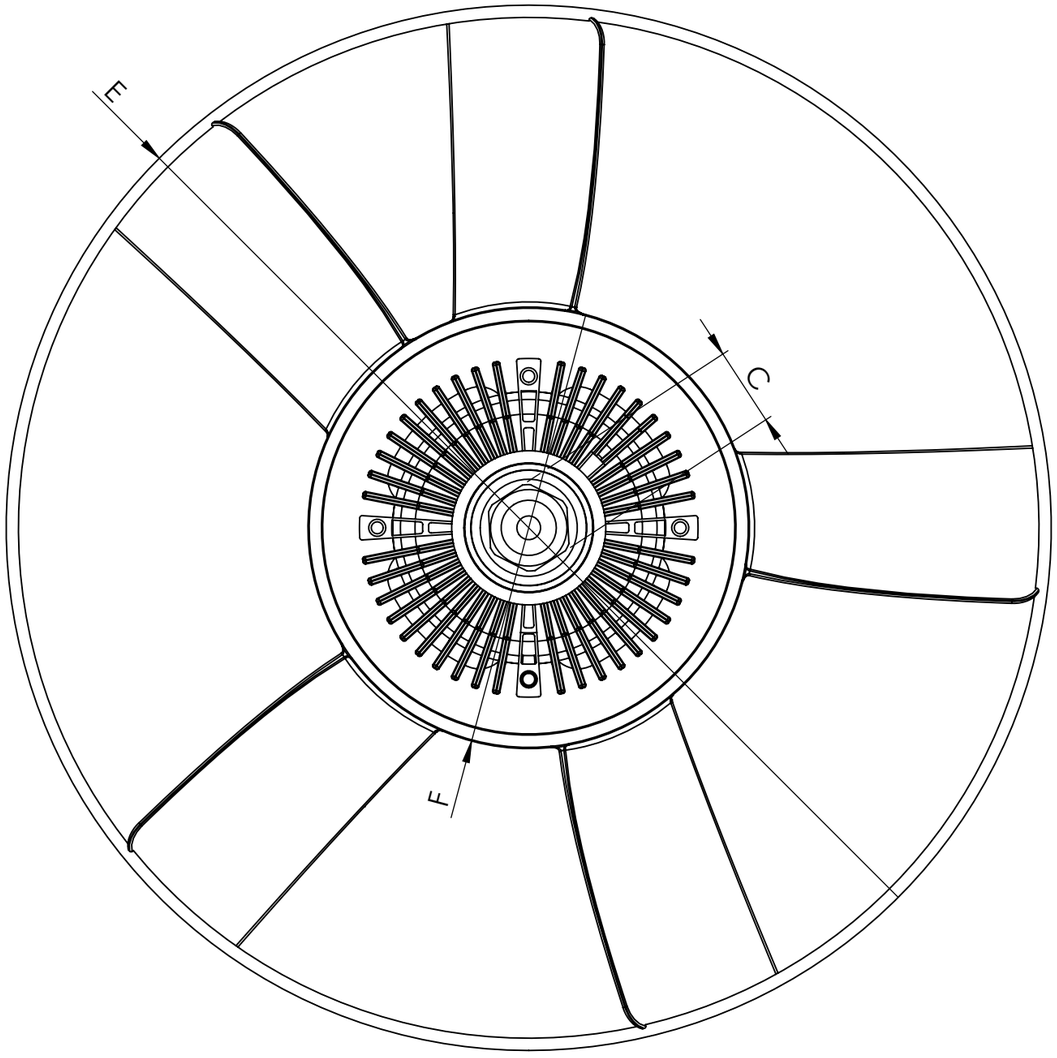

Dimensional values

INPUT SHAFT				FAN CLUTCH WHEEL			
Ref.nº	**Value**	**Ref.nº**	**Value**	**Ref.nº**	**Value**	**Ref.nº**	**Value**
A	M30x1.5 LH			E	∅445 ± 3 mm		
B	∅35.2 mm			F	∅180.5 ± 3 mm		
C	36 mm			G	76.5 ± 3 mm		
D	14 ± 2 mm			H	61.5 ± 1 mm		
				I	24.5 ± 3 mm		
				Number of blades	5	**Configuration**	CW

Modification nº	Modified	Date	Reason
4			
3			
2			
1			

Comments

The drawing views may not match the actual part

Drawn	02/07/20 J.S.
Checked	02/07/20 V.P.
General Tolerance	ISO 2768 c-K
Material	

cojali

Assembly	Technical sheet
Part name	Fan clutch wheel
ID. Reference	8124148
Scale: 2/5	**Sheet** 1/1
Review: 0	