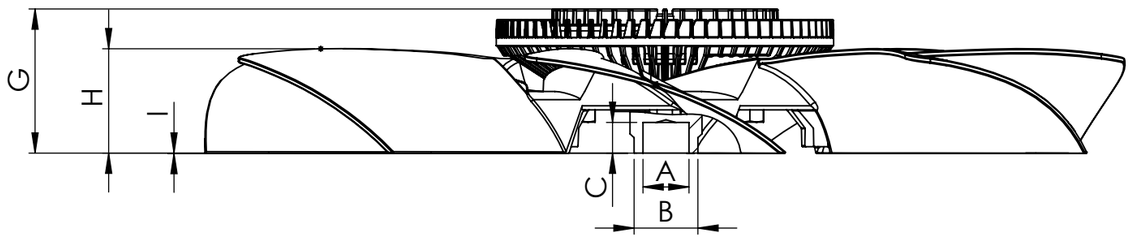

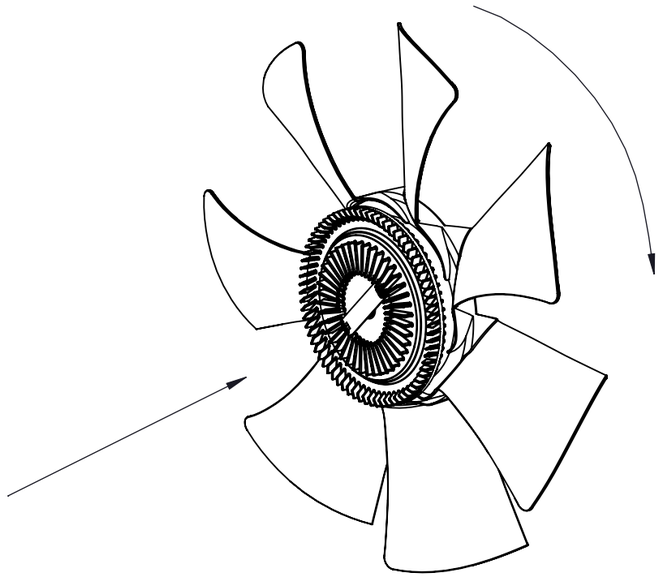

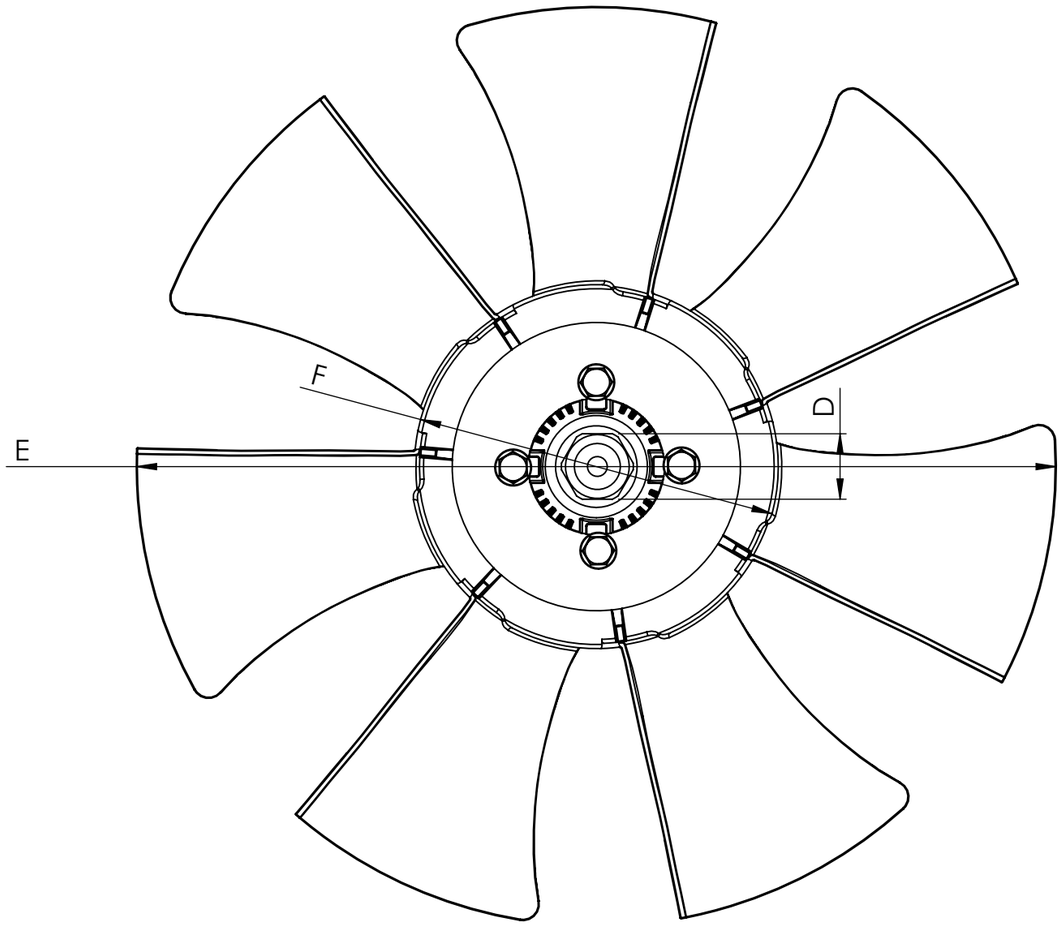

Dimensional values

INPUT SHAFT				FAN CLUTCH WHEEL			
Ref.nº	**Value**	**Ref.nº**	**Value**	**Ref.nº**	**Value**	**Ref.nº**	**Value**
A	M24x1.25 LH			E	∅455±5 mm		
B	∅31 mm			F	∅175±3 mm		
C	15±2 mm			G	70±1 mm		
D	32 mm			H	51.5±3 mm		
				I	4.5±3 mm		
				Number of blades	7	**Configuration**	CW

Modification

nº	Modified	Date	Reason
4			
3			
2			
1			

Comments

Drawn	06/09/21 V.P.
Checked	06/09/21 R.U.
General Tolerance	ISO 2768 c-K
Material	

cojali

Assembly	Technical sheet
Part name	Fan clutch wheel
ID. Reference	8822810
Scale: 1/3	**Sheet 1/1**
Review: 0	