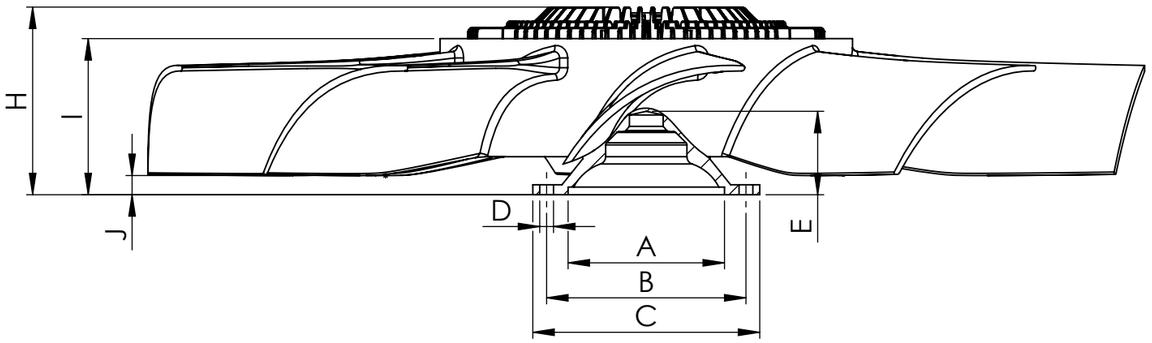

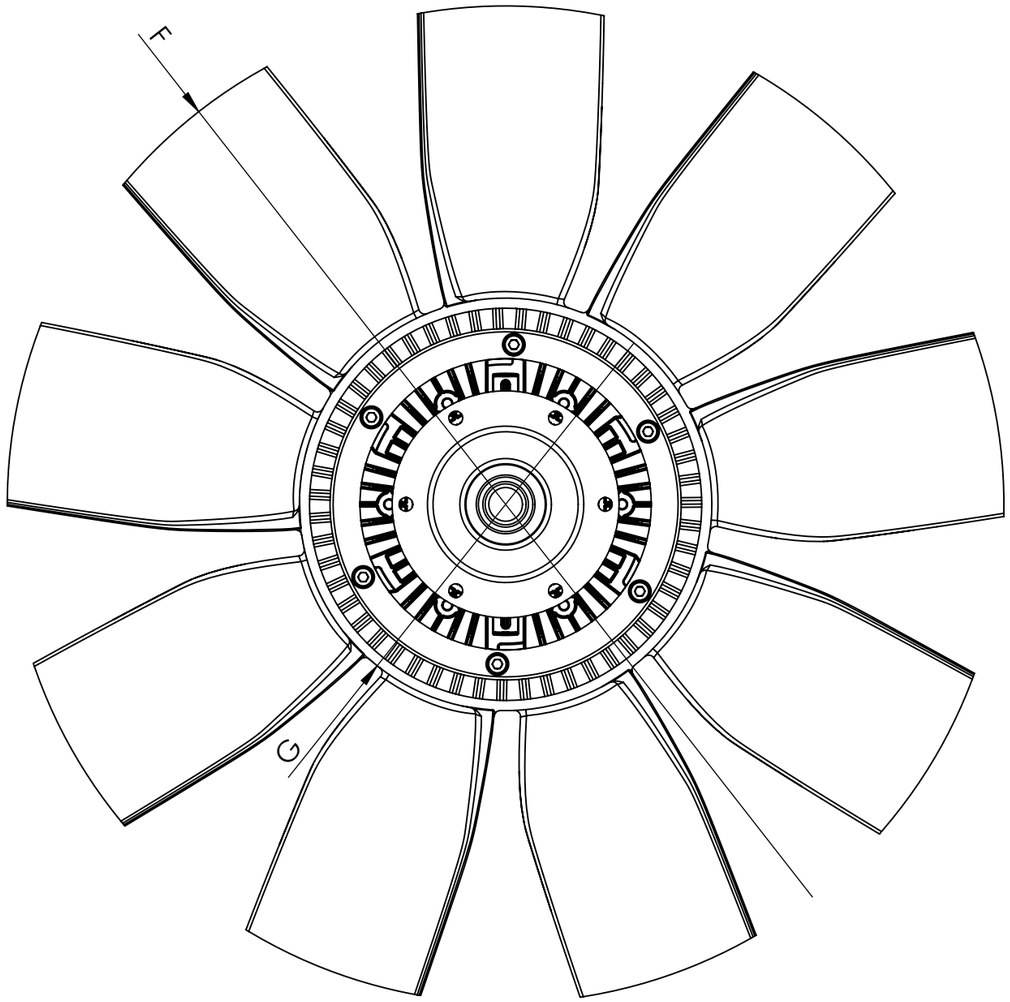

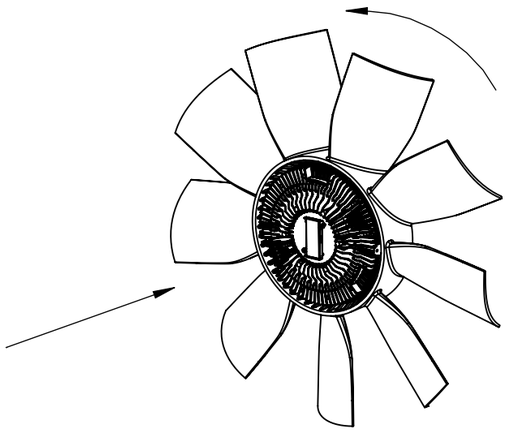

Dimensional values

INPUT SHAFT				FAN CLUTCH WHEEL			
Ref.nº	**Value**	**Ref.nº**	**Value**	**Ref.nº**	**Value**	**Ref.nº**	**Value**
A	∅102 H8 mm			F	∅650 ± 3 mm		
B	∅130 mm			G	∅270 ± 3 mm		
C	∅148 mm			H	122.3 ± 1 mm		
D	6x ∅9 mm			I	102.8 ± 3 mm		
E	54.4 ± 2 mm			J	12.8 ± 3 mm		
				Number of blades	9	**Configuration**	CCW

Modification

nº	Modified	Date	Reason
4			
3			
2			
1			

Comments

Drawn	22/06/20 J.S.
Checked	22/06/20 V.P.
General Tolerance	ISO 2768 c-K
Material	
Assembly	Technical sheet
Part name	Fan clutch wheel
ID. Reference	7051103
Scale: 1/4	
Review: 0	
Sheet	**1/1**