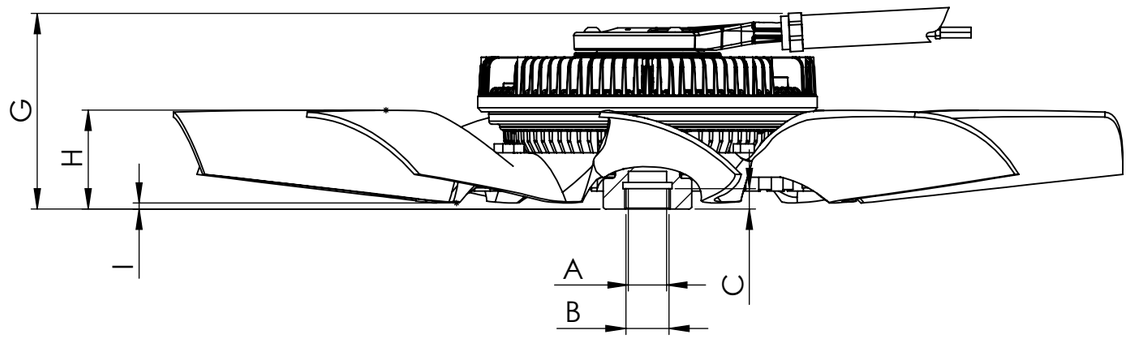

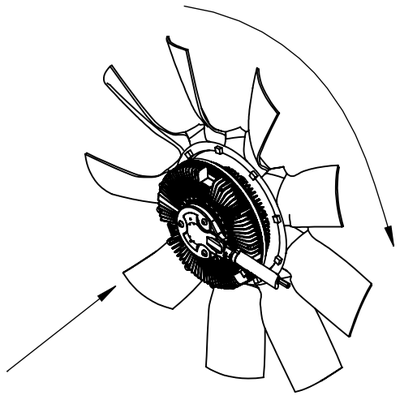

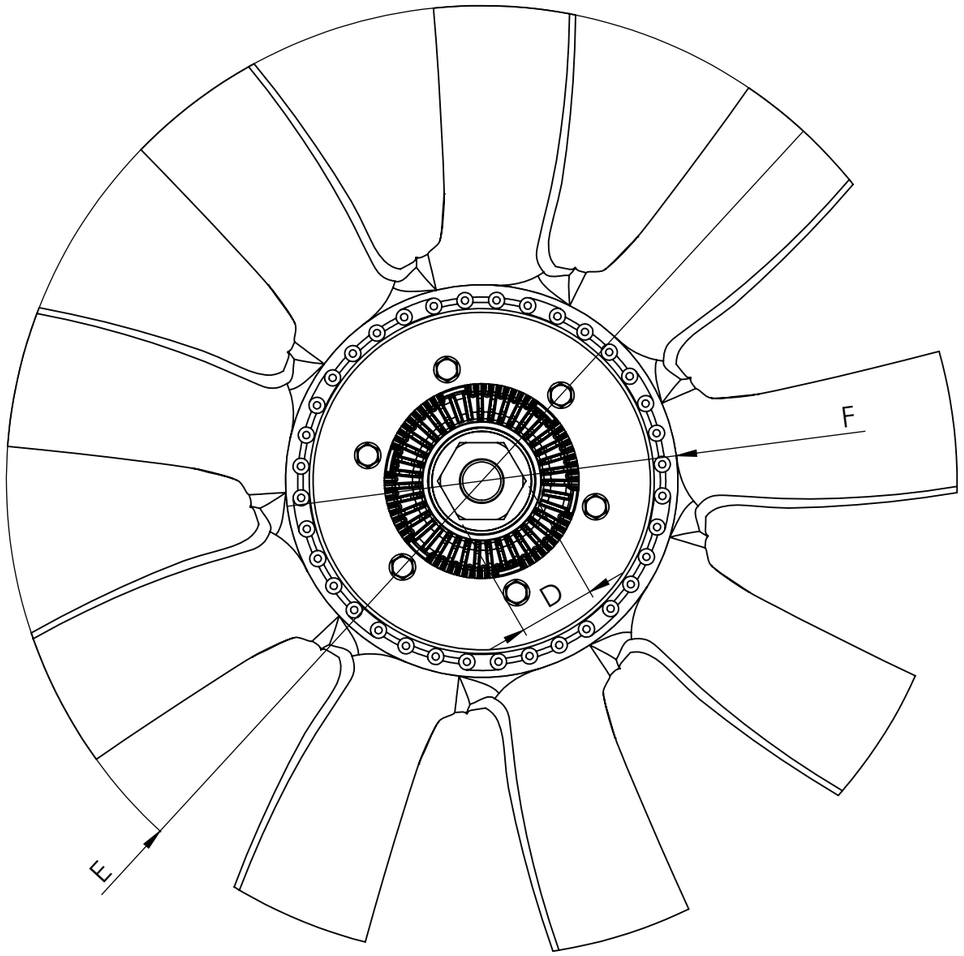

Dimensional values

INPUT SHAFT				FAN CLUTCH WHEEL			
Ref.nº	**Value**	**Ref.nº**	**Value**	**Ref.nº**	**Value**	**Ref.nº**	**Value**
A	∅25 H8 mm			E	∅620 ±3 mm		
B	M30 x 2 LH mm			F	∅253 ±3 mm		
C	13.3 ± 2 mm			G	127.3± 1 mm		
D	50 mm			H	72.7 ± 3 mm		
				I	4.7 ± 3 mm		
				Number of blades	9	**Configuration**	CW

Modification					
4				**Drawn**	
3				24/09/21 S.S.	
2				**Checked**	
1				24/09/21 R.U.	
nº	**Modified**	**Date**	**Reason**	**General Tolerance**	
Comments				ISO 2768 c-K	
				Material	

cojali

Assembly	Technical sheet
Part name	Fan clutch wheel
ID. Reference	8521876
Scale: 1/4	**Sheet 1/1**
Review: 0	