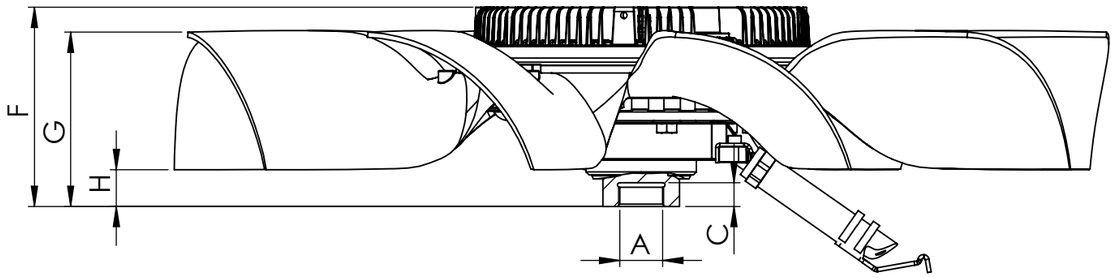

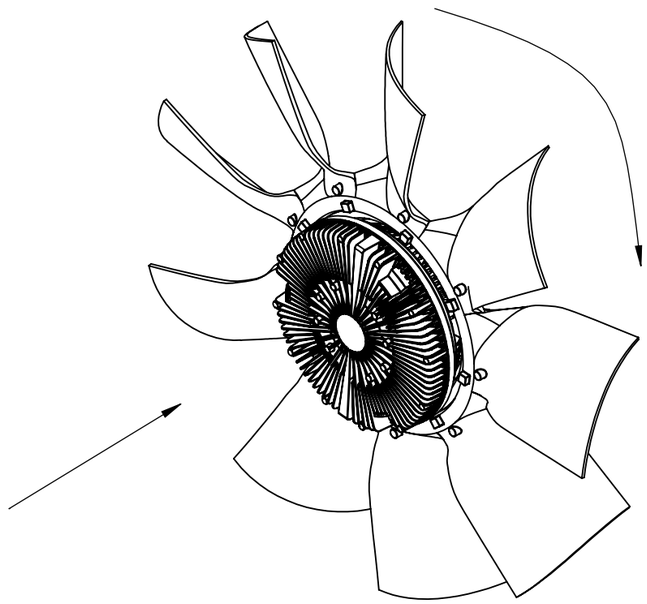

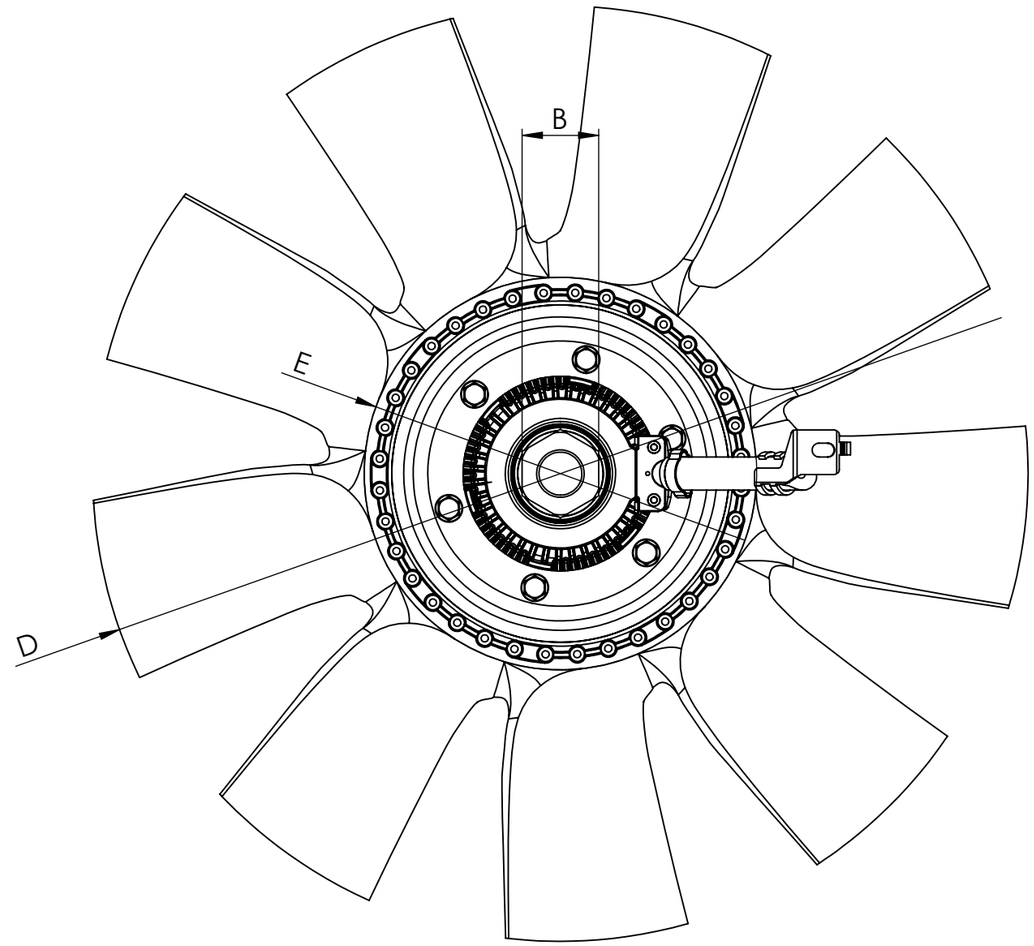

Dimensional values

INPUT SHAFT				FAN CLUTCH WHEEL			
Ref.nº	**Value**	**Ref.nº**	**Value**	**Ref.nº**	**Value**	**Ref.nº**	**Value**
A	M30 x 2 LH			D	∅610 ±3 mm		
B	50 mm			E	∅255 ±3 mm		
C	15.5±2 mm			F	129.9 ± 1 mm		
				G	114 ±3 mm		
				H	24±3 mm		
				Number of blades	9	**Configuration**	CW

Modification				
4				
3				
2				
1				
nº	**Modified**	**Date**	**Reason**	

Comments

Drawn	25/09/23 E.H.
Checked	25/09/23 R.U.
General Tolerance	ISO 2768 c-K
Material	

cojali

Assembly	Technical sheet
Part name	T13
ID. Reference	8822923
Scale: 1/4	**Sheet 1/1**
Review: 0	