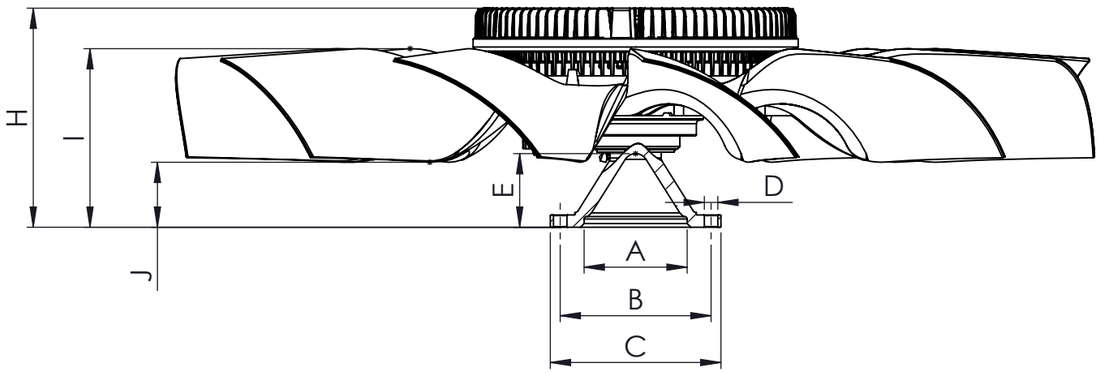

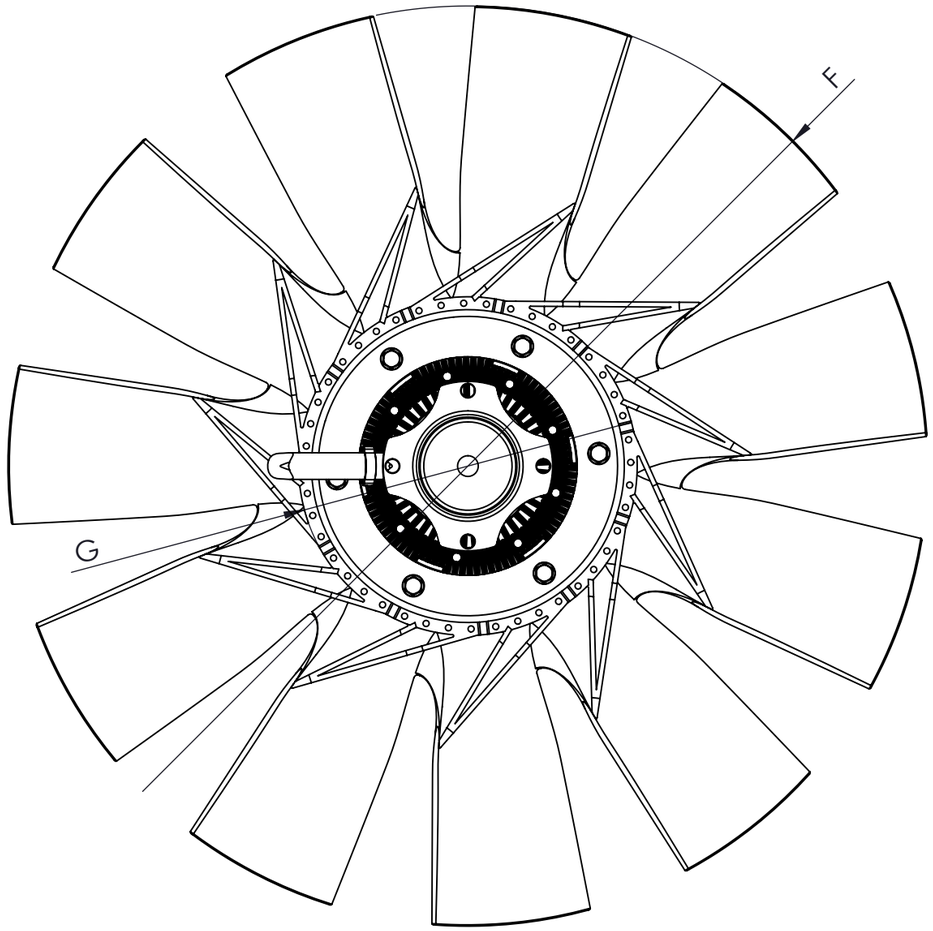

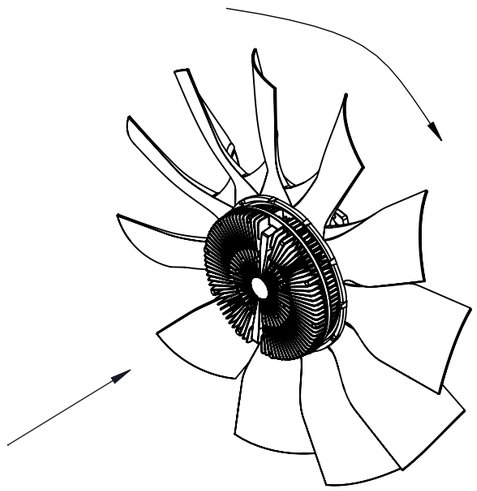

Dimensional values

INPUT SHAFT				FAN CLUTCH WHEEL			
Ref.nº	**Value**	**Ref.nº**	**Value**	**Ref.nº**	**Value**	**Ref.nº**	**Value**
A	∅84 H8 mm			F	∅750 ±3 mm		
B	∅123 mm			G	∅278 ±3 mm		
C	∅139.1 mm			H	178.6 ± 1 mm		
D	4x ∅11 mm			I	145 ±3 mm		
E	60 ±2 mm			J	50 ±3 mm		
				Number of blades	11	**Configuration**	CW

Modification				
nº	**Modified**	**Date**	**Reason**	
4				
3				
2				
1				

Comments

Drawn	09/07/20 A.D.
Checked	09/07/20 A.R.
General Tolerance	ISO 2768 c-K
Material	

cojali

Assembly	Technical sheet
Part name	Fan clutch wheel
ID. Reference	7075421
Scale: 1/5	
Review: 0	
Sheet	**1/1**