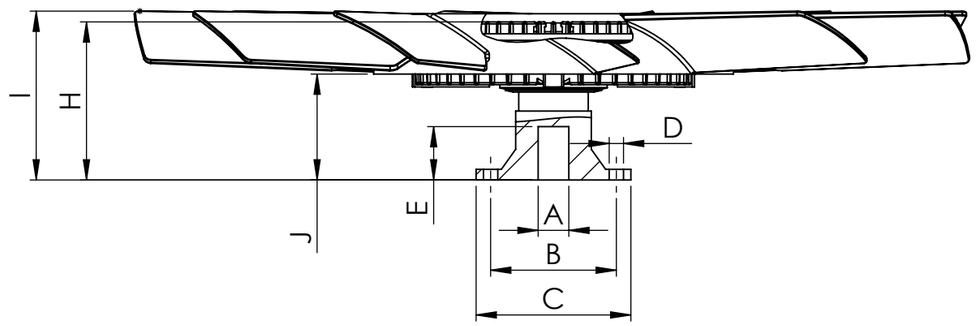

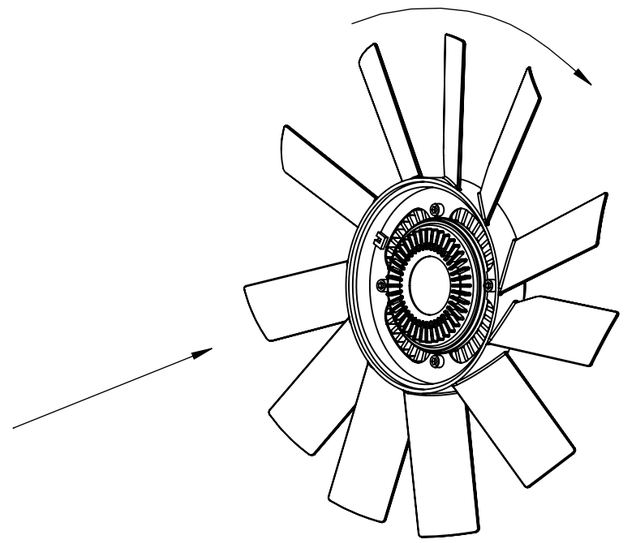

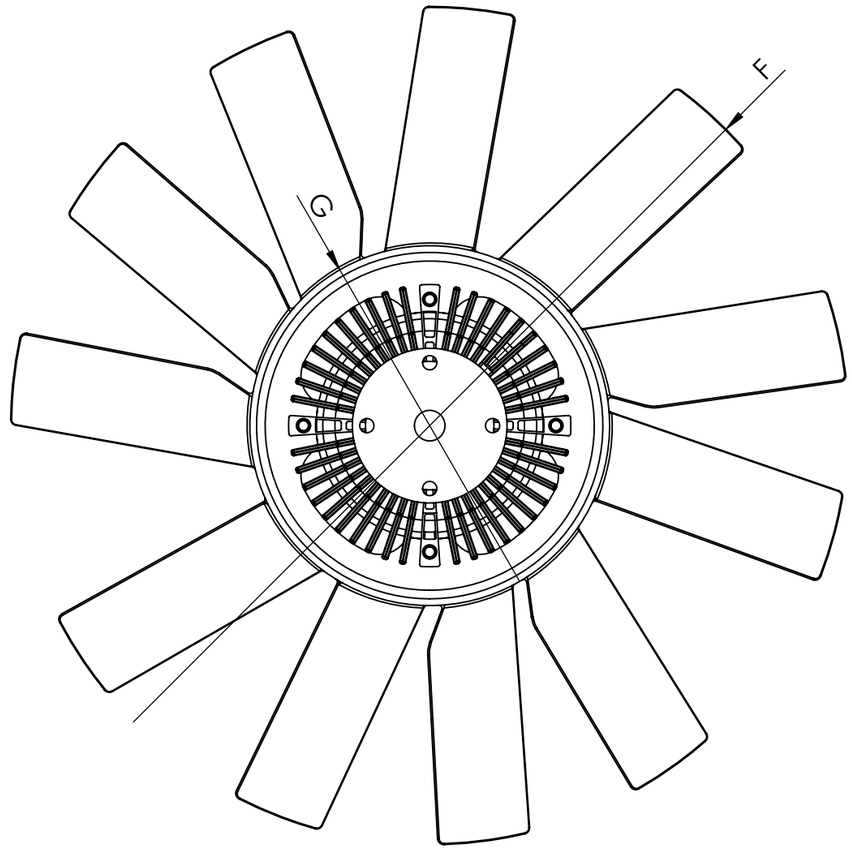

Dimensional values

INPUT SHAFT				FAN CLUTCH WHEEL			
Ref.nº	**Value**	**Ref.nº**	**Value**	**Ref.nº**	**Value**	**Ref.nº**	**Value**
A	∅32 +0,2 0 mm			F	∅410 ±3 mm		
B	∅60 mm			G	∅176 ±3 mm		
C	∅71,5 mm			H	77,7 ± 1 mm		
D	4x ∅7 mm			I	76,4 ±3 mm		
E	16 ±2 mm			J	46,4 ±3 mm		
				Number of blades	11	**Configuration**	CW

Modification nº	Modified	Date	Reason
4			
3			
2			
1			

Comments

The drawing views may not match the actual part.

Drawn	02/07/20 S.F.
Checked	02/07/20 A.D.
General Tolerance	ISO 2768 c-K
Material	

cojali

Assembly	Technical sheet
Part name	Fan clutch wheel
ID. Reference	8126110
Scale: 1/3	**Sheet 1/1**
Review: 0	