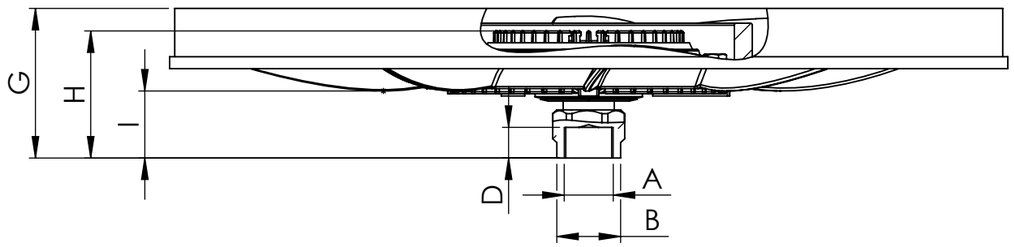

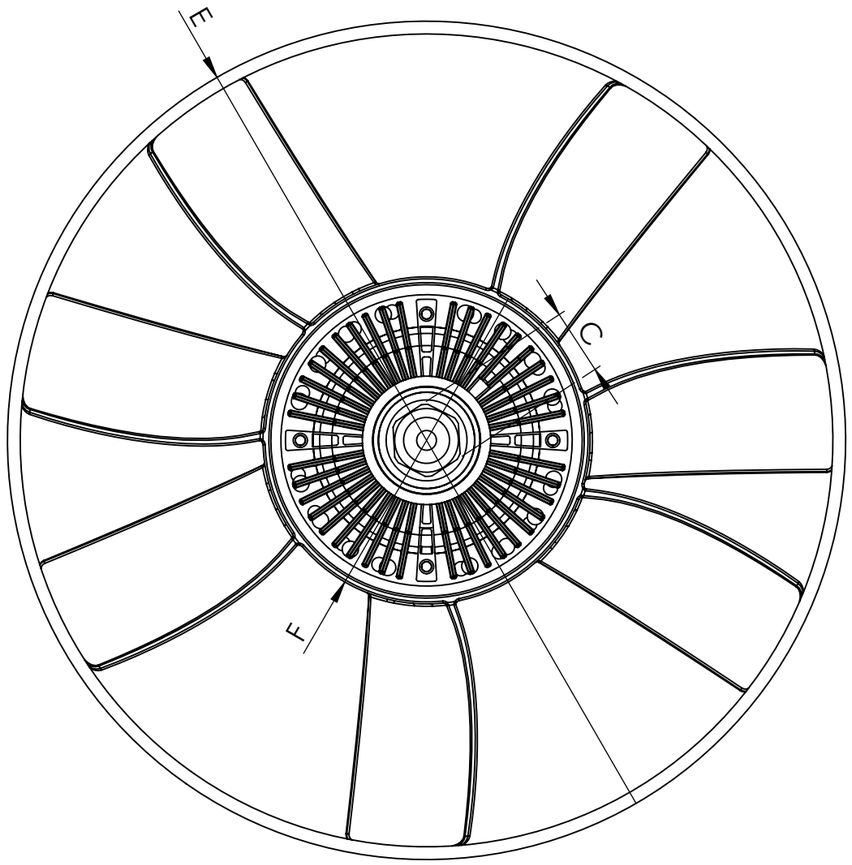

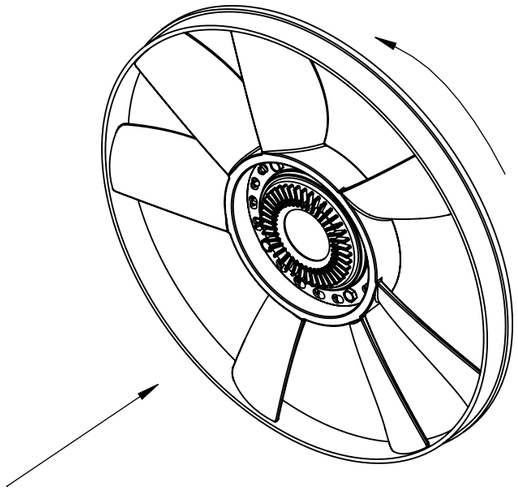

Dimensional values

INPUT SHAFT				FAN CLUTCH WHEEL			
Ref.nº	**Value**	**Ref.nº**	**Value**	**Ref.nº**	**Value**	**Ref.nº**	**Value**
A	M24x1.5 RH			E	∅403 ± 3 mm		
B	∅31 mm			F	∅180.8 ± 3 mm		
C	32 mm			G	77.7 ± 3 mm		
D	14 ± 3 mm			H	68.5 ± 1 mm		
				I	47.4 ± 3 mm		
				Number of blades	7	**Configuration**	CCW

Modification

nº	Modified	Date	Reason
4			
3			
2			
1			

Comments

The drawing views may not match the actual part

Drawn	03/07/20 J.S.
Checked	03/07/20 V.P.
General Tolerance	ISO 2768 c-K
Material	

cojali

Assembly	Technical sheet
Part name	Fan clutch wheel
ID. Reference	8115810
Scale: 1/3	
Review: 0	
Sheet	**1/1**