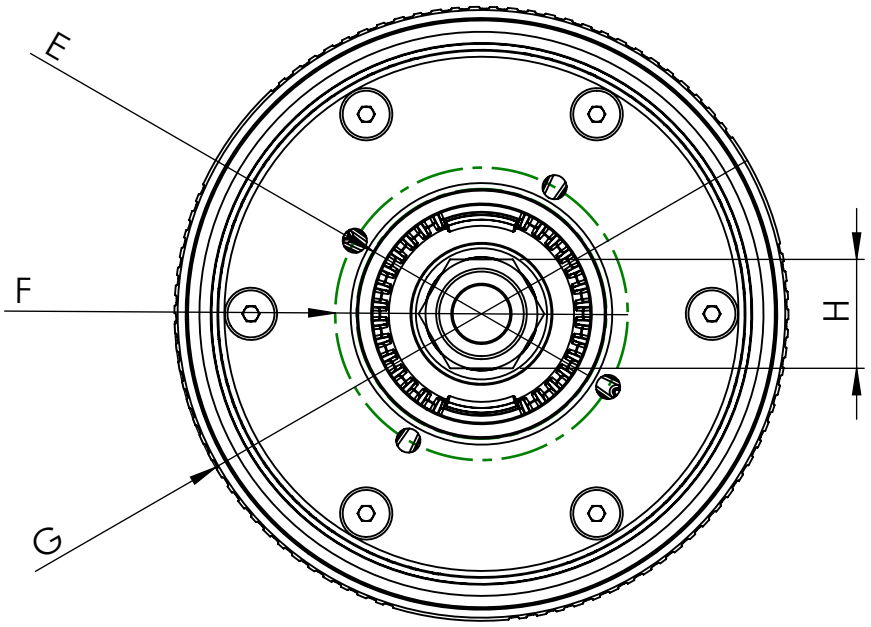

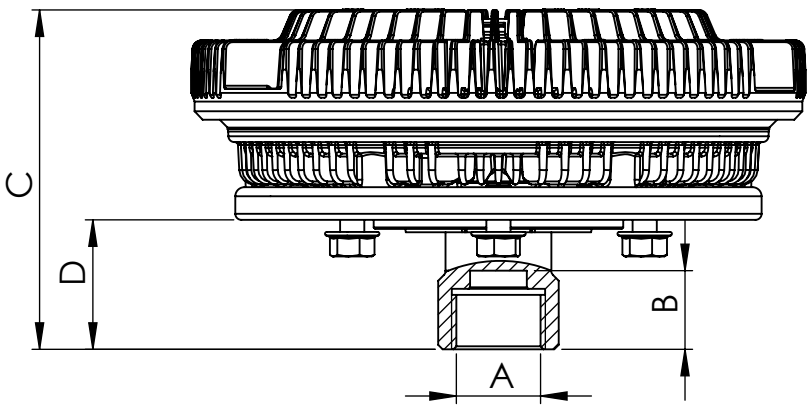

Rotation: Clockwise

Dimensional values

INPUT SHAFT				FAN CLUTCH			
Ref. nº	**Value**	**Ref. nº**	**Value**	**Ref. nº**	**Value**	**Ref. nº**	**Value**
A	M30 x 2 LH			C	112,2 ± 1 mm		
B	26 ± 2 mm			D	42,8 ± 0,5 mm		
H	36 mm			E	∅82,5 0 -0,3 mm		
				F	∅96,7 ± 0,5 mm		
				G	∅203 mm		

Modification nº	Modified	Date	Reason
4			
3			
2			
1			

Comments

Drawn	09/08/21 S.S.
Checked	09/08/21 R.U.
Assembly	Technical sheet
Part name	Fan clutch
ID. Reference	7203124
Scale: 2/5	
Review: 0	

General Tolerance: ISO 2768 c-K

Material

cojali

Sheet 1/1