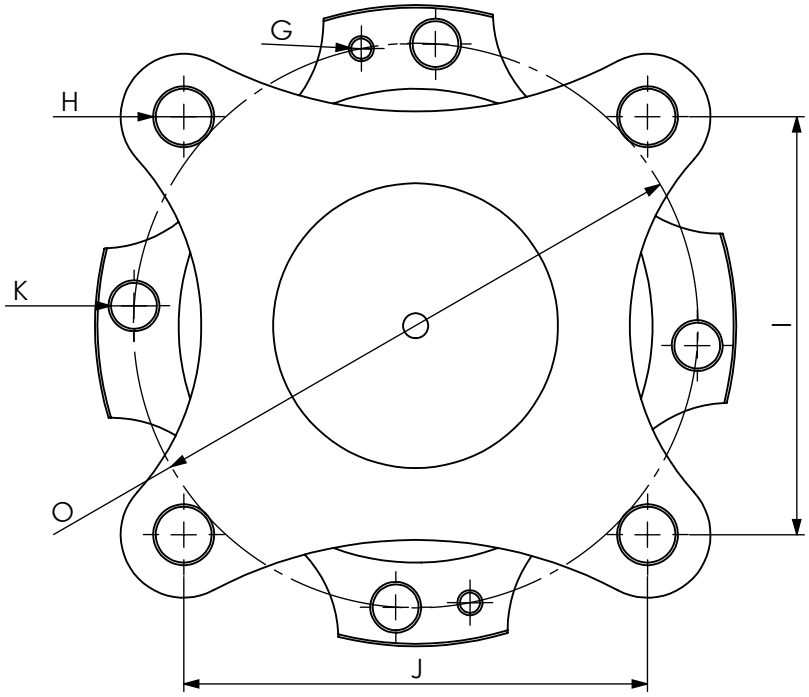

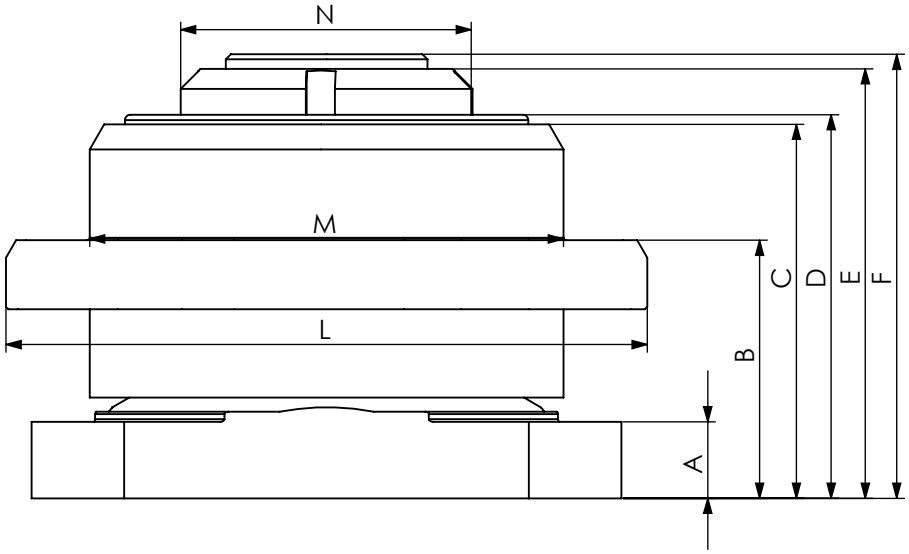

Dimensional values

Ref. nº	Value	Ref. nº	Value	Ref. nº	Value	Ref. nº	Value
A	14.7 mm	G	2x M5 mm	M	∅94 h8 mm		
B	51.1 mm	H	4x ∅11 mm	N	∅58 mm		
C	74.1 mm	I	82.9 mm	O	∅112 ±0.2 mm		
D	76.1 mm	J	92 mm				
E	85 mm	K	4x∅9 mm				
F	88 mm	L	∅126 mm				

Modification

nº	Modified	Date	Reason
4			
3			
2			
1			

Comments

General Tolerance	ISO 2768 c-K
Material	
Drawn	27/01/22 S.S.
Checked	27/01/22 R.U.
Assembly	Technical sheet
Part name	Fan clutch adapter
ID. Reference	7089001
Scale: 2/3	
Review: 0	
Sheet	**1/1**