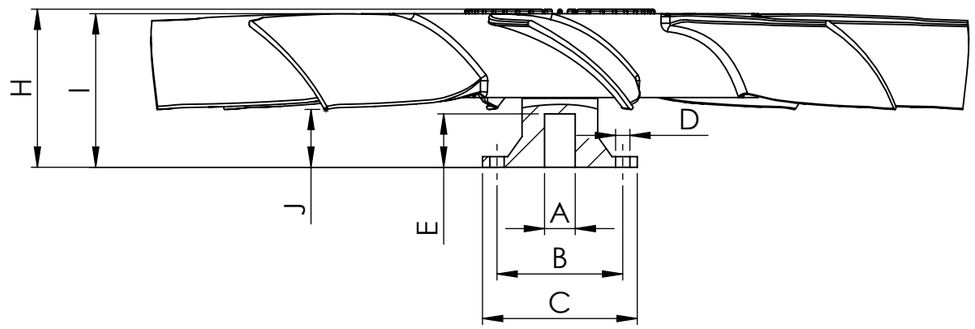

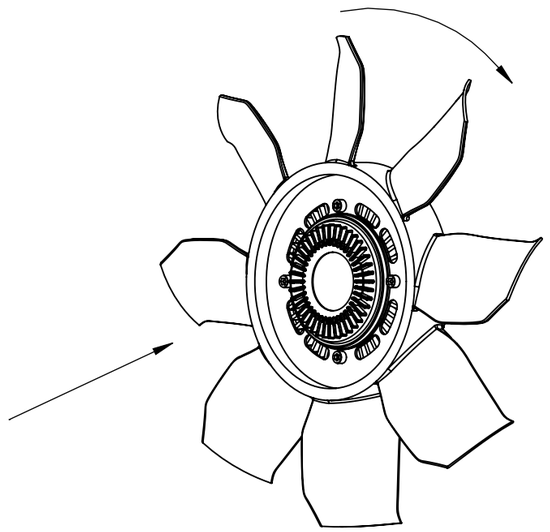

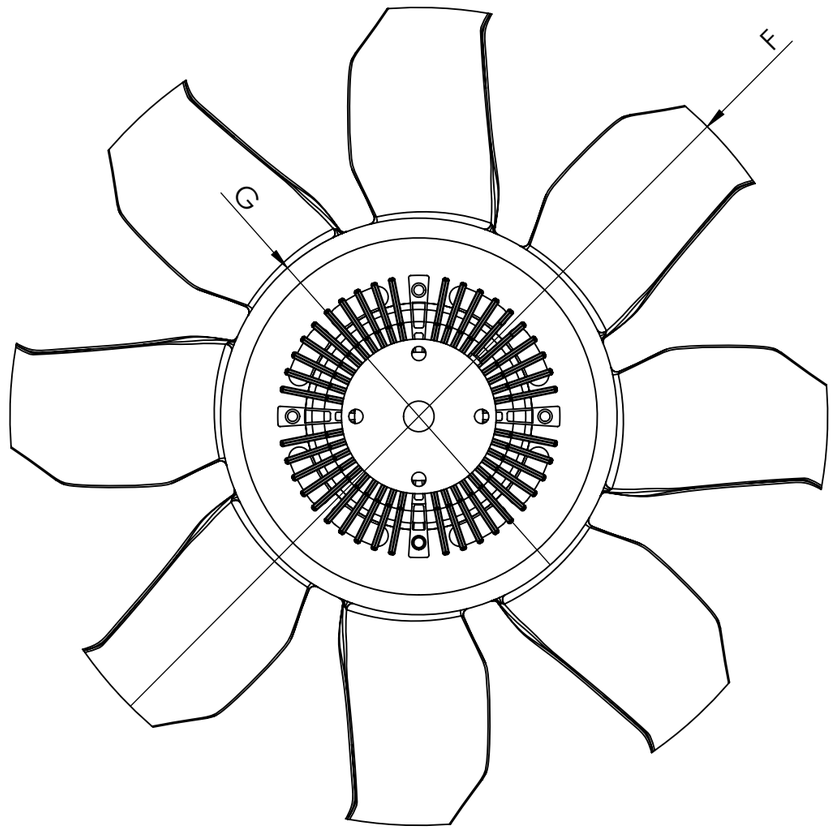

Dimensional values

INPUT SHAFT				FAN CLUTCH WHEEL			
Ref.nº	**Value**	**Ref.nº**	**Value**	**Ref.nº**	**Value**	**Ref.nº**	**Value**
A	∅16 +0,2 0 mm			F	∅400 ±3 mm		
B	∅50 mm			G	∅194 ±3 mm		
C	∅66 mm			H	73,2 ±1 mm		
D	4x ∅7 mm			I	70,1 ±3 mm		
E	11 ±2 mm			J	28,9 ±3 mm		
				Number of blades	8	**Configuration**	CW

Modification

nº	Modified	Date	Reason
4			
3			
2			
1			

Comments

The drawing views may not match the actual part.

Drawn	02/07/20 S.F.
Checked	02/07/20 A.D.
General Tolerance	ISO 2768 c-K
Material	

cojali

Assembly	Technical sheet
Part name	Fan clutch wheel
ID. Reference	8120108
Scale: 1/3	
Review: 0	
Sheet	**1/1**