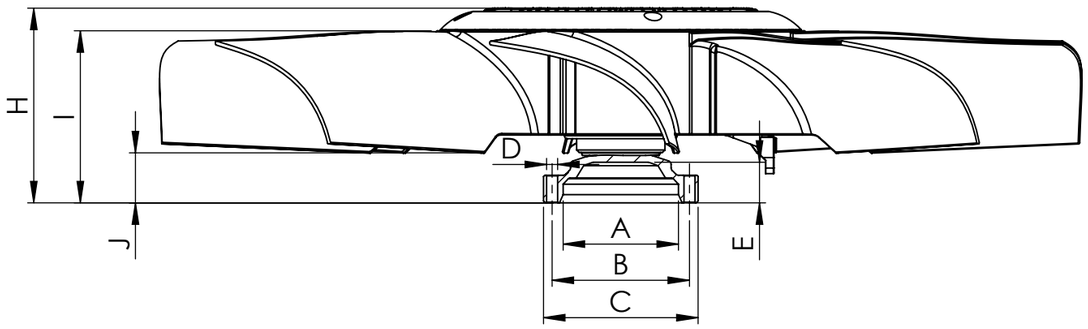

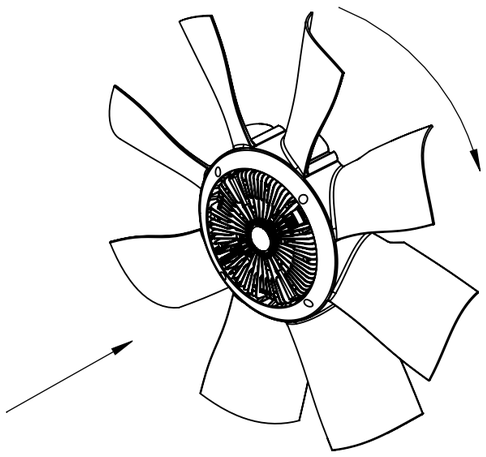

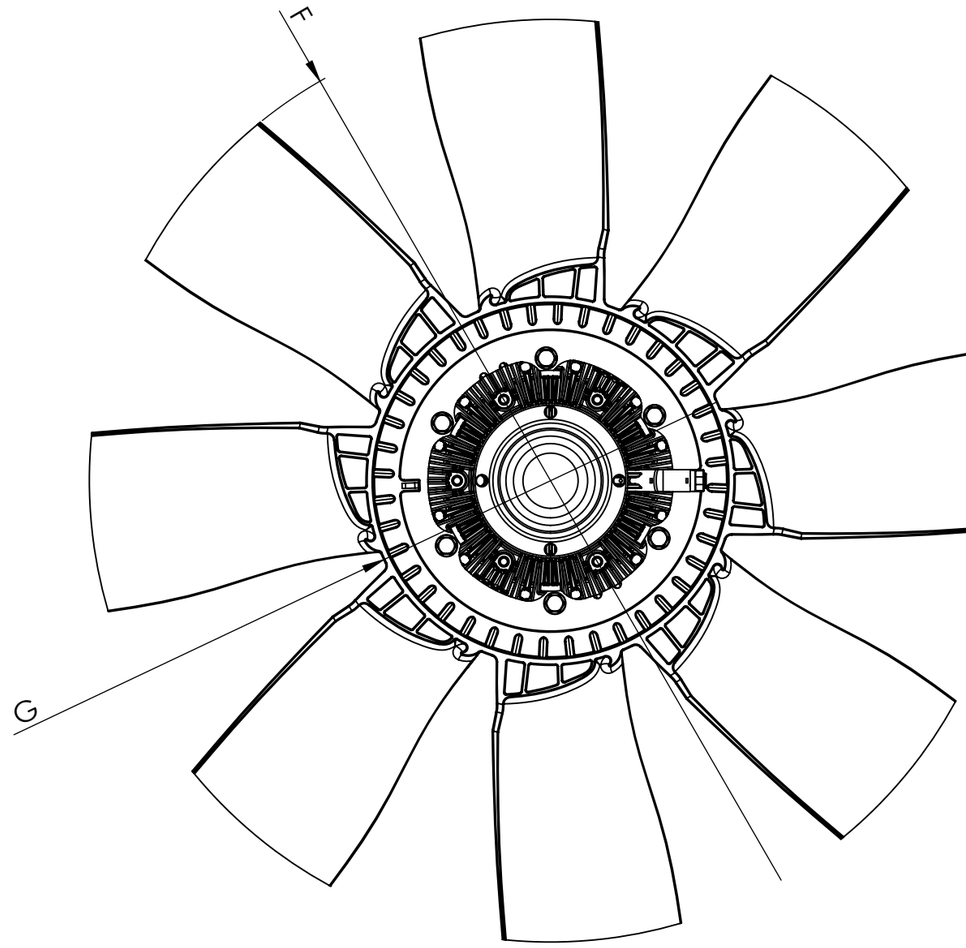

Dimensional values

INPUT SHAFT				FAN CLUTCH WHEEL			
Ref.nº	**Value**	**Ref.nº**	**Value**	**Ref.nº**	**Value**	**Ref.nº**	**Value**
A	∅94 H8 mm			F	∅750 ± 3 mm		
B	∅112 mm			G	∅301 ± 3 mm		
C	∅126 mm			H	159 ± 1 mm		
D	4x ∅9 mm			I	141 ± 3 mm		
E	33 ± 2 mm			J	40 ± 3 mm		
				Number of blades	8	**Configuration**	CW

Modification

nº	Modified	Date	Reason
4			
3			
2			
1			

Comments

Drawn	27/11/20 R.U.
Checked	27/11/20 A.R.
General Tolerance	ISO 2768 c-K
Material	
Assembly	Technical sheet
Part name	Fan clutch wheel
ID. Reference	7085426
Scale: 1/5	
Review: 0	
Sheet	**1/1**