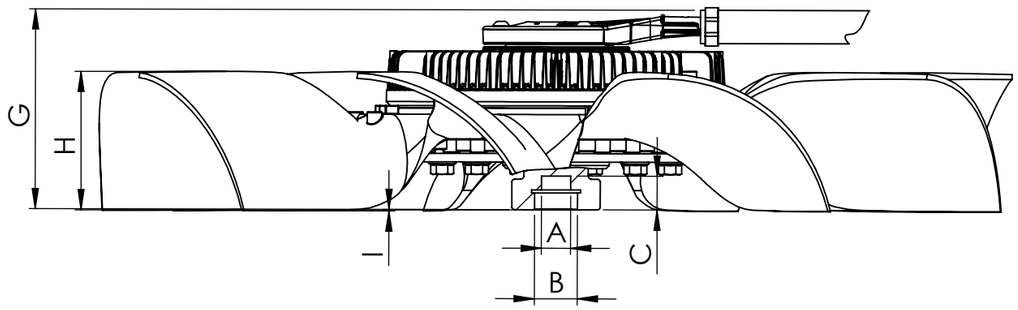

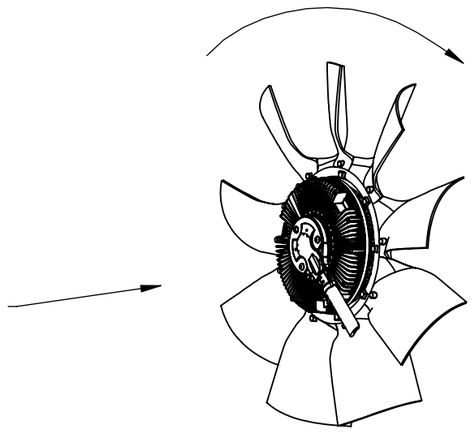

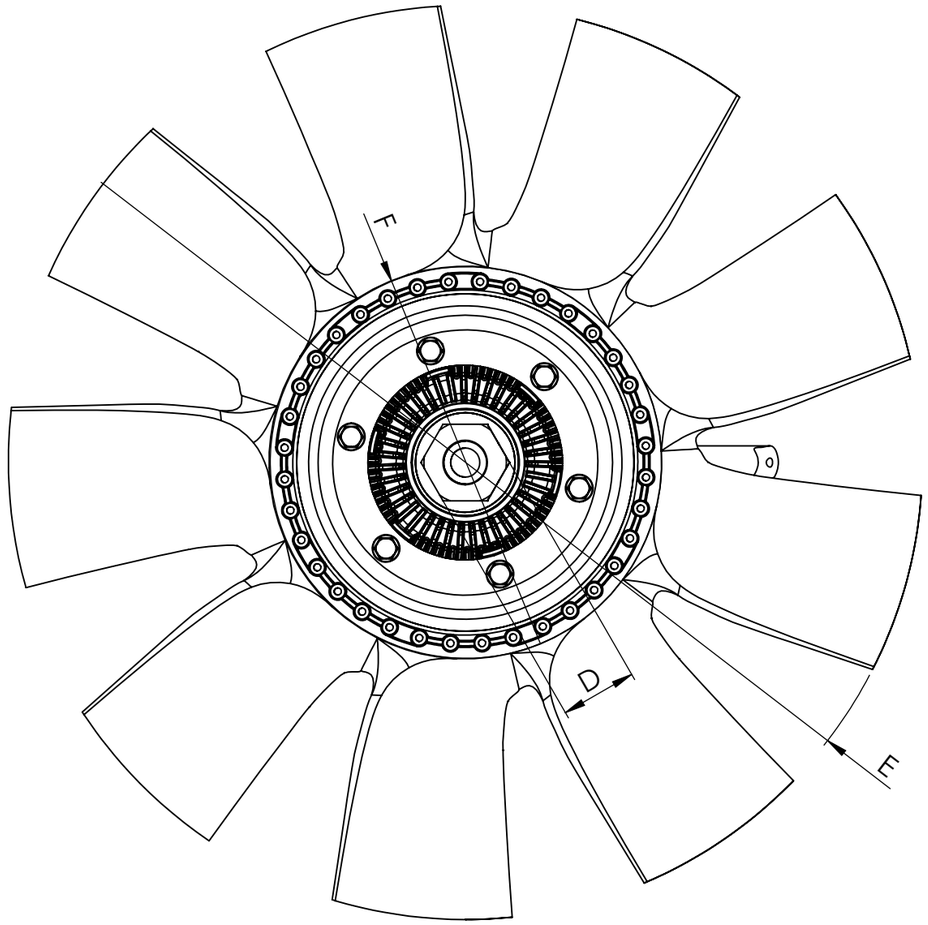

Dimensional values

INPUT SHAFT				FAN CLUTCH WHEEL			
Ref.nº	**Value**	**Ref.nº**	**Value**	**Ref.nº**	**Value**	**Ref.nº**	**Value**
A	∅ 19 H8 mm			E	∅ 596 ± 3 mm		
B	M30X2 LH			F	∅ 256 ± 3 mm		
C	22 ± 2 mm			G	130 ± 1 mm		
D	50 mm			H	90 ± 3 mm		
E				I	0.6 ± 3 mm		
				Number of blades	9	**Configuration**	CW

Modification

nº	Modified	Date	Reason
4			
3			
2			
1			

Comments

Drawn	19/08/22 J.J.
Checked	19/08/22 R.U.
General Tolerance	ISO 2768 c-K
Material	

cojali

Assembly	Technical sheet
Part name	Fan clutch wheel
ID. Reference	8521925
Scale: 1/4	
Review: 0	
Sheet	**1/1**